Robert Bosch Power Tools GmbH
70538 Stuttgart
GERMANY

www.bosch-pt.com

1 609 92A 7XG (2022.11) DOC / 229

1 609 92A 7XG

BOSCH

GSR | GSB Professional

18V-55



de Originalbetriebsanleitung
en Original instructions
fr Notice originale
es Manual original
pt Manual original
it Istruzioni originali
nl Oorspronkelijke gebruiksaanwijzing
da Original brugsanvisning
sv Bruksanvisning i original
no Original driftsinstruks
fi Alkuperäiset ohjeet
el Πρωτότυπο οδηγιών χρήσης
tr Orijinal işletme talimatı
pl Instrukcja oryginalna
cs Původní návod k používání
sk Pôvodný návod na použitie
hu Eredeti használati utasítás
ru Оригинальное руководство по эксплуатации
uk Оригінальна інструкція з експлуатації
kk Пайдалану нұсқаулығының түпнұсқасы
ro Instrucţiuni originale
bg Оригинална инструкция
mk Оригинално упатство за работа
sr Originalno uputstvo za rad
sl Izvirna navodila
hr Originalne upute za rad
et Algupärane kasutusjuhend
lv Instrukcijas oriģinālvalodā
lt Originali instrukcija
ko 사용 설명서 원본
ar دليل التشغيل الأصلي
fa دفترچه راهنمای اصلی

Deutsch ..... Seite 6
English ..... Page 13
Français ..... Page 19
Español ..... Página 26
Português ..... Página 33
Italiano ..... Pagina 40
Nederlands ..... Pagina 47
Dansk ..... Side 53
Svensk ..... Sidan 60
Norsk ..... Side 66
Suomi ..... Sivu 72
Ελληνικά ..... Σελίδα 78
Türkçe ..... Sayfa 85
Polski ..... Strona 92
Čeština ..... Stránka 99
Slovenčina ..... Stránka 106
Magyar ..... Oldal 112
Русский ..... Страница 119
Українська ..... Сторінка 128
Қазақ ..... Бет 135
Română ..... Pagina 143
Български ..... Страница 150
Македонски ..... Страница 158
Srpski ..... Strana 165
Slovenščina ..... Stran 171
Hrvatski ..... Stranica 178
Eesti ..... Lehekülg 184
Latviešu ..... Lappuse 190
Lietuvių k. ..... Puslapis 197
한국어 ..... 페이지 203
عربي ..... الصفحة 210
فارسی ..... صفحه 216

CE / UKCA ..... I/i

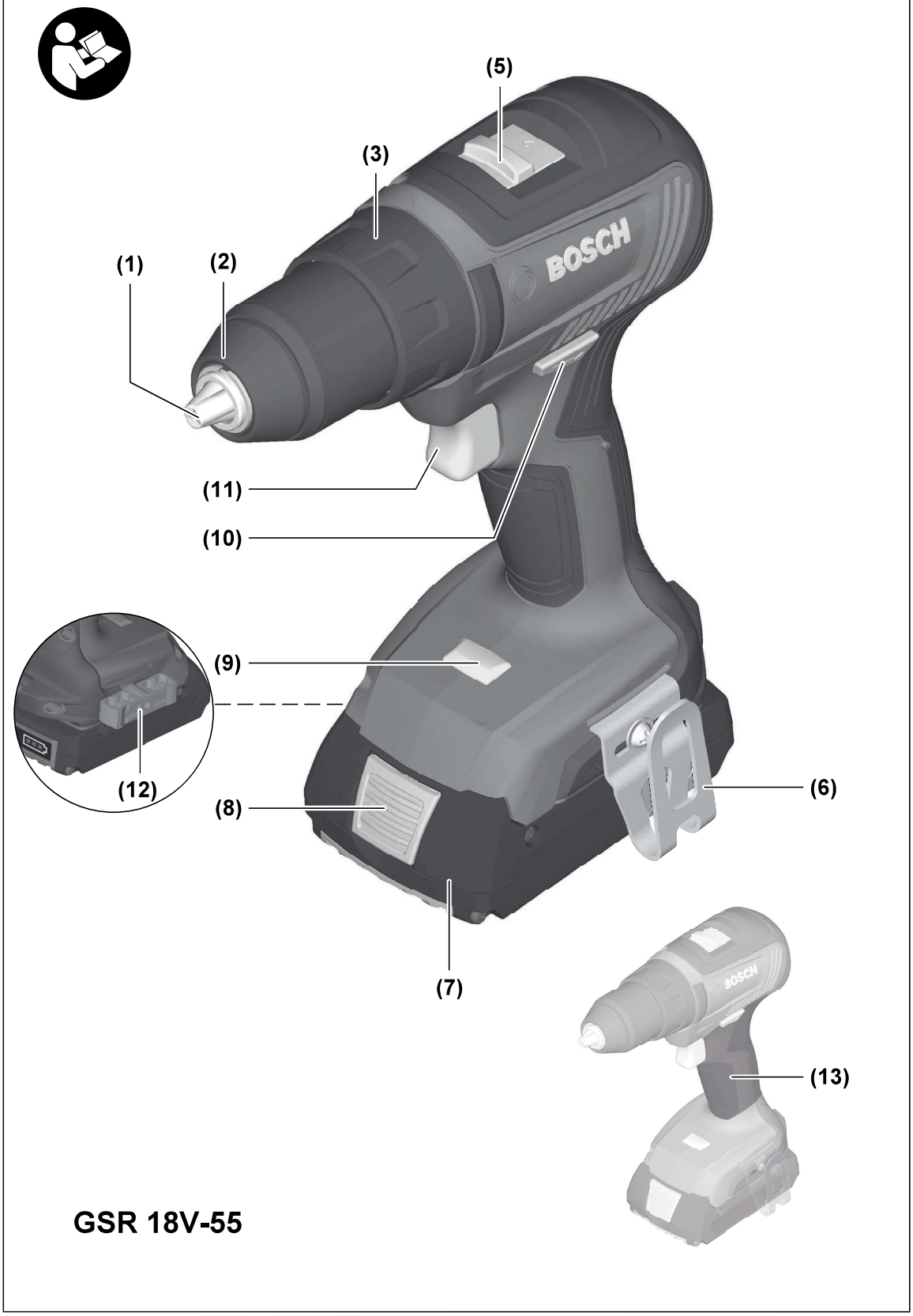
(5)
(3)
(1)
(2)
BOSCH
(11)
(10)
(9)
(12)
(8)
(6)
(7)
BOSCH
(13)
GSR 18V-55

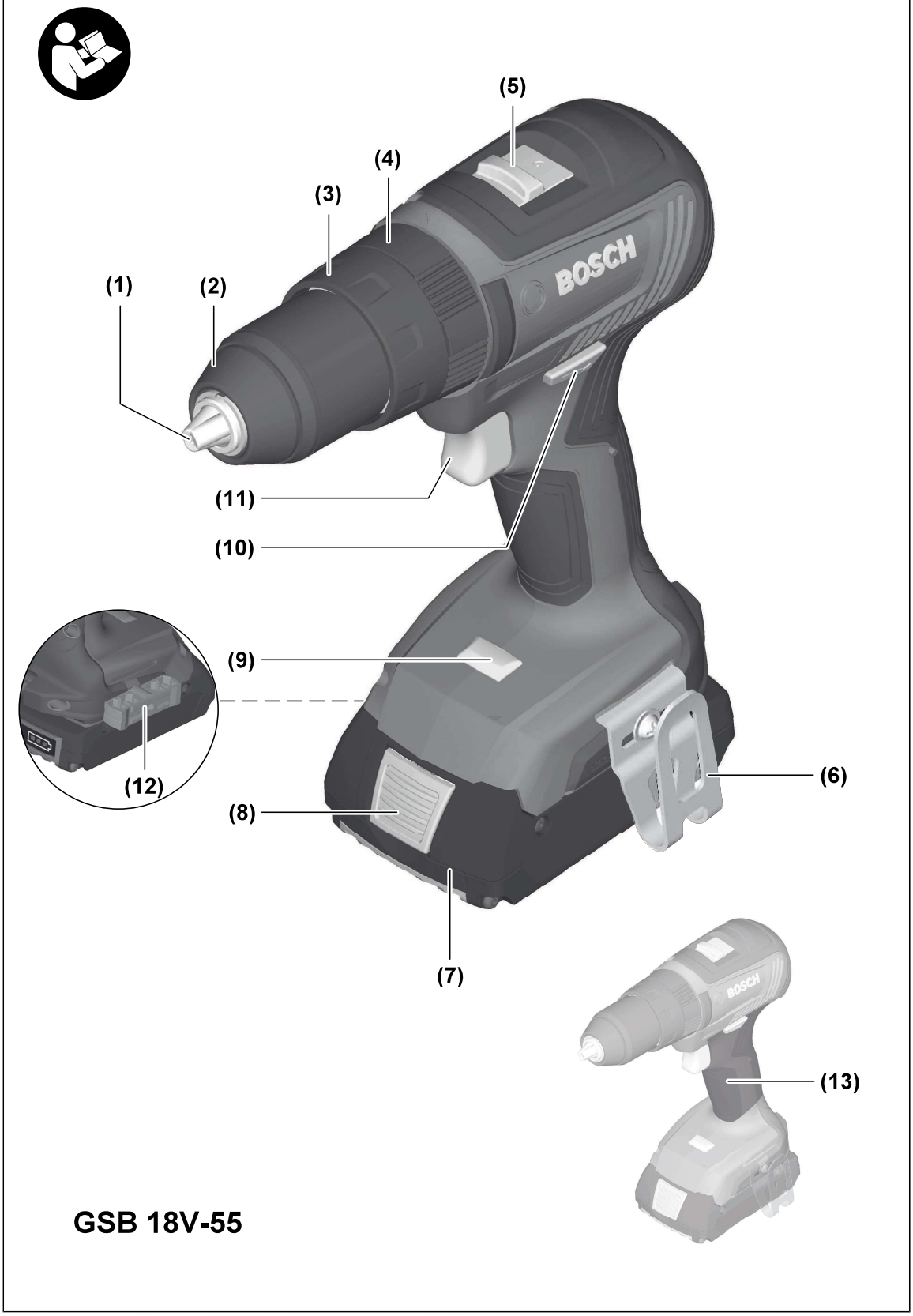
(5)
(4)
(3)
(1)
(2)
BOSCH
(11)
(10)
(9)
(12)
(6)
(8)
(7)
(13)
GSB 18V-55

A

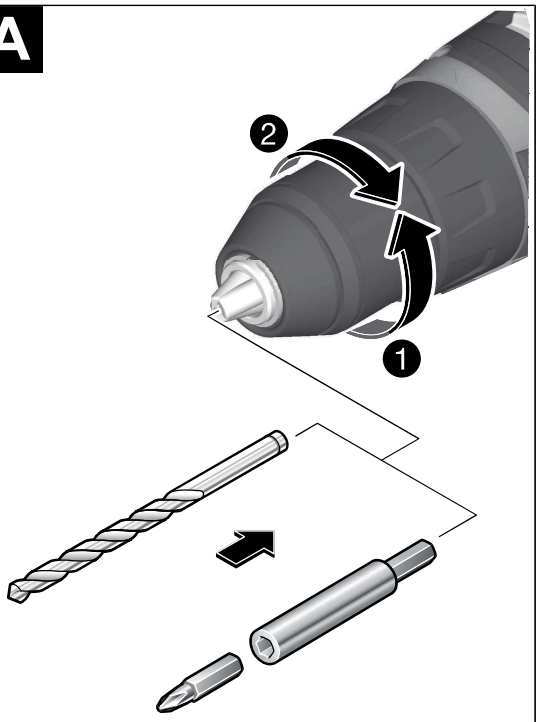

B

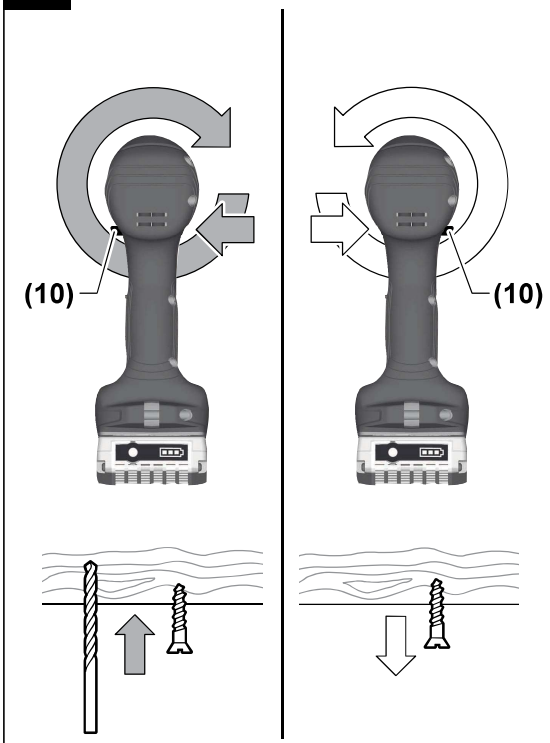

C

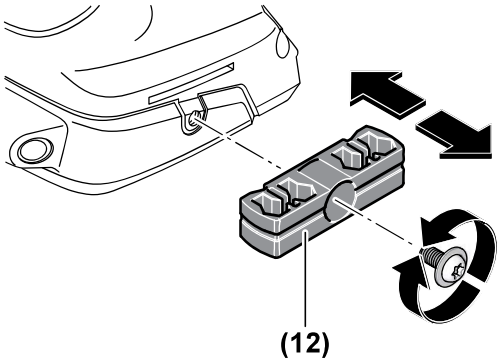

Dies gilt auch bei Vertrieb unter Verwendung von Fernkommunikationsmitteln, wenn die Lager- und Versandflächen für Elektro- und Elektronikgeräte mindestens 400 m^2 betragen oder die gesamten Lager- und Versandflächen mindestens 800 m^2 betragen, wobei die unentgeltliche Abholung auf Elektro- und Elektronikgeräte der Kategorien 1 (Wärmeüberträger), 2 (Bildschirmgeräte) und 4 (Großgeräte mit mindestens einer äußeren Abmessung über 50 cm) beschränkt ist. Für alle übrigen Elektro- und Elektronikgeräte muss der Vertreiber geeignete Rückgabemöglichkeiten in zumutbarer Entfernung zum jeweiligen Endnutzer gewährleisten; das gilt auch für Altgeräte, die in keiner äußeren Abmessung größer als 25 cm sind, die der Endnutzer zurückgeben will, ohne ein neues Gerät zu kaufen.

Akkus/Batterien:

Li-Ion:

Bitte beachten Sie die Hinweise im Abschnitt Transport (siehe „Transport“, Seite 12).

English

Safety Instructions

General Power Tool Safety Warnings

⚠ WARNING **Read all safety warnings, instructions, illustrations and specifications provided with this power tool.** Failure to follow all instructions listed below may result in electric shock, fire and/or serious injury.

Save all warnings and instructions for future reference.

The term "power tool" in the warnings refers to your mains-operated (corded) power tool or battery-operated (cordless) power tool.

Work area safety

- **Keep work area clean and well lit.** Cluttered or dark areas invite accidents.
- **Do not operate power tools in explosive atmospheres, such as in the presence of flammable liquids, gases or dust.** Power tools create sparks which may ignite the dust or fumes.
- **Keep children and bystanders away while operating a power tool.** Distractions can cause you to lose control.

Electrical safety

- **Power tool plugs must match the outlet. Never modify the plug in any way. Do not use any adapter plugs with earthed (grounded) power tools.** Unmodified plugs and matching outlets will reduce risk of electric shock.
- **Avoid body contact with earthed or grounded surfaces, such as pipes, radiators, ranges and refrigerators.** There is an increased risk of electric shock if your body is earthed or grounded.
- **Do not expose power tools to rain or wet conditions.** Water entering a power tool will increase the risk of electric shock.
- **Do not abuse the cord. Never use the cord for carrying, pulling or unplugging the power tool. Keep cord away from heat, oil, sharp edges or moving parts.** Damaged or entangled cords increase the risk of electric shock.
- **When operating a power tool outdoors, use an extension cord suitable for outdoor use.** Use of a cord suitable for outdoor use reduces the risk of electric shock.
- **If operating a power tool in a damp location is unavoidable, use a residual current device (RCD) protected supply.** Use of an RCD reduces the risk of electric shock.

Personal safety

- **Stay alert, watch what you are doing and use common sense when operating a power tool. Do not use a power tool while you are tired or under the influence of drugs, alcohol or medication.** A moment of inattention while operating power tools may result in serious personal injury.
- **Use personal protective equipment. Always wear eye protection.** Protective equipment such as a dust mask, non-skid safety shoes, hard hat or hearing protection used for appropriate conditions will reduce personal injuries.
- **Prevent unintentional starting. Ensure the switch is in the off-position before connecting to power source and/or battery pack, picking up or carrying the tool.** Carrying power tools with your finger on the switch or energising power tools that have the switch on invites accidents.
- **Remove any adjusting key or wrench before turning the power tool on.** A wrench or a key left attached to a rotating part of the power tool may result in personal injury.
- **Do not overreach. Keep proper footing and balance at all times.** This enables better control of the power tool in unexpected situations.
- **Dress properly. Do not wear loose clothing or jewellery. Keep your hair and clothing away from moving parts.** Loose clothes, jewellery or long hair can be caught in moving parts.
- **If devices are provided for the connection of dust extraction and collection facilities, ensure these are connected and properly used.** Use of dust collection can reduce dust-related hazards.
- **Do not let familiarity gained from frequent use of tools allow you to become complacent and ignore tool safety principles.** A careless action can cause severe injury within a fraction of a second.

Power tool use and care

- **Do not force the power tool. Use the correct power tool for your application.** The correct power tool will do

the job better and safer at the rate for which it was designed.

- ▶ **Do not use the power tool if the switch does not turn it on and off.** Any power tool that cannot be controlled with the switch is dangerous and must be repaired.
- ▶ **Disconnect the plug from the power source and/or remove the battery pack, if detachable, from the power tool before making any adjustments, changing accessories, or storing power tools.** Such preventive safety measures reduce the risk of starting the power tool accidentally.
- ▶ **Store idle power tools out of the reach of children and do not allow persons unfamiliar with the power tool or these instructions to operate the power tool.** Power tools are dangerous in the hands of untrained users.
- ▶ **Maintain power tools and accessories. Check for misalignment or binding of moving parts, breakage of parts and any other condition that may affect the power tool's operation. If damaged, have the power tool repaired before use.** Many accidents are caused by poorly maintained power tools.
- ▶ **Keep cutting tools sharp and clean.** Properly maintained cutting tools with sharp cutting edges are less likely to bind and are easier to control.
- ▶ **Use the power tool, accessories and tool bits etc. in accordance with these instructions, taking into account the working conditions and the work to be performed.** Use of the power tool for operations different from those intended could result in a hazardous situation.
- ▶ **Keep handles and grasping surfaces dry, clean and free from oil and grease.** Slippery handles and grasping surfaces do not allow for safe handling and control of the tool in unexpected situations.

Battery tool use and care

- ▶ **Recharge only with the charger specified by the manufacturer.** A charger that is suitable for one type of battery pack may create a risk of fire when used with another battery pack.
- ▶ **Use power tools only with specifically designated battery packs.** Use of any other battery packs may create a risk of injury and fire.
- ▶ **When battery pack is not in use, keep it away from other metal objects, like paper clips, coins, keys, nails, screws or other small metal objects, that can make a connection from one terminal to another.** Shorting the battery terminals together may cause burns or a fire.
- ▶ **Under abusive conditions, liquid may be ejected from the battery; avoid contact. If contact accidentally occurs, flush with water. If liquid contacts eyes, additionally seek medical help.** Liquid ejected from the battery may cause irritation or burns.
- ▶ **Do not use a battery pack or tool that is damaged or modified.** Damaged or modified batteries may exhibit unpredictable behaviour resulting in fire, explosion or risk of injury.
- ▶ **Do not expose a battery pack or tool to fire or excessive temperature.** Exposure to fire or temperature above 130°C may cause explosion.
- ▶ **Follow all charging instructions and do not charge the battery pack or tool outside the temperature range specified in the instructions.** Charging improperly or at temperatures outside the specified range may damage the battery and increase the risk of fire.

Service

- ▶ **Have your power tool serviced by a qualified repair person using only identical replacement parts.** This will ensure that the safety of the power tool is maintained.
- ▶ **Never service damaged battery packs.** Service of battery packs should only be performed by the manufacturer or authorized service providers.

Safety information for drills and screwdrivers

Safety instructions for all operations

- ▶ **Wear ear protectors when impact drilling.** Exposure to noise can cause hearing loss.
- ▶ **Hold the power tool by insulated gripping surfaces, when performing an operation where the cutting accessory or fasteners may contact hidden wiring.** Cutting accessory or fasteners contacting a "live" wire may make exposed metal parts of the power tool "live" and could give the operator an electric shock.

Safety instructions when using long drill bits

- ▶ **Never operate at higher speed than the maximum speed rating of the drill bit.** At higher speeds, the bit is likely to bend if allowed to rotate freely without contacting the workpiece, resulting in personal injury.
- ▶ **Always start drilling at low speed and with the bit tip in contact with the workpiece.** At higher speeds, the bit is likely to bend if allowed to rotate freely without contacting the workpiece, resulting in personal injury.
- ▶ **Apply pressure only in direct line with the bit and do not apply excessive pressure.**Bits can bend causing breakage or loss of control, resulting in personal injury.

Additional safety warnings

- ▶ **Hold the power tool securely.** When tightening and loosening screws be prepared for temporarily high torque reactions.
- ▶ **Secure the workpiece.** A workpiece clamped with clamping devices or in a vice is held more secure than by hand.
- ▶ **Use suitable detectors to determine if there are hidden supply lines or contact the local utility company for assistance.** Contact with electric cables can cause fire and electric shock. Damaging gas lines can lead to explosion. Breaking water pipes causes property damage.
- ▶ **Always wait until the power tool has come to a complete stop before placing it down.** The application tool can jam and cause you to lose control of the power tool.
- ▶ **In case of damage and improper use of the battery, vapours may be emitted. The battery can set alight or ex-**

plode. Ensure the area is well ventilated and seek medical attention should you experience any adverse effects. The vapours may irritate the respiratory system.

- ▶ **Do not open the battery.** There is a risk of short-circuiting.
- ▶ **The battery can be damaged by pointed objects such as nails or screwdrivers or by force applied externally.** An internal short circuit may occur, causing the battery to burn, smoke, explode or overheat.
- ▶ **Only use the battery with products from the manufacturer.** This is the only way in which you can protect the battery against dangerous overload.




Protect the battery against heat, e.g. against continuous intense sunlight, fire, dirt, water and moisture. There is a risk of explosion and short-circuiting.

- ▶ **Switch the power tool off immediately if the application tool becomes blocked. Be prepared for high torque reactions which cause kickback.** The application tool becomes blocked when it becomes jammed in the workpiece or when the power tool becomes overloaded.

Product Description and Specifications



Read all the safety and general instructions. Failure to observe the safety and general instructions may result in electric shock, fire and/or serious injury.

Please observe the illustrations at the beginning of this operating manual.

Intended use

The power tool is intended for driving and loosening screws and for drilling in wood, metal, ceramic and plastic. The GSB is also designed for impact drilling in brick, masonry and stone.

Product Features

The numbering of the product features refers to the diagram of the power tool on the graphics page.

(1) Tool holder
(2) Keyless chuck
(3) Torque presetting ring
(4) Operating mode presetting ring (**GSB 18V-55**)
(5) Gear selector switch
(6) Belt clip
(7) Rechargeable battery[a)]
(8) Battery release button[a)]
(9) Worklight (LED)
(10) Rotational direction switch
(11) On/off switch
(12) Bit holder[a)]
(13) Handle (insulated gripping surface)

a) **Accessories shown or described are not included with the product as standard. You can find the complete selection of accessories in our accessories range.**

Technical data

Cordless Drill/Driver		GSR 18V-55	GSB 18V-55
Article number		**3 601 JH5 2..**	**3 601 JH5 3..**
Rated voltage	V=	18	18
No-load speed[A)]			
– First gear	min^{-1}	0–460	0–460
– Second gear	min^{-1}	0–1 800	0–1 800
Impact rate	min^{-1}	–	0–27 000
Torque, hard/soft screwdriving application according to ISO 5393 (2017)[A)]	Nm	55/28	55/28
Max. drilling diameter (1st/2nd gear)			
– Wood	mm	35	35
– Steel	mm	13	13
– Masonry	mm	–	13
Chuck capacity	mm	1.5–13	1.5–13
Max. screw diameter	mm	10	10
Weight according to EPTA-Procedure 01:2014[B)]	kg	1.4–2.4	1.4–2.5
Recommended ambient temperature during charging	°C	0 to +35	0 to +35

Cordless Drill/Driver		GSR 18V-55	GSB 18V-55
Permitted ambient temperature during operation and during storage	°C	–20 to +50	–20 to +50
Recommended rechargeable batteries		GBA 18V... ProCORE18V...	GBA 18V... ProCORE18V...
Recommended chargers		GAL 18... GAX 18... GAL 36...	GAL 18... GAX 18... GAL 36...

A) Measured at 20–25 °C with rechargeable battery **GBA 18V 5.0Ah**.

B) Measured with **GBA 18V 1.5Ah** and **GBA 18V 12 Ah**.

Noise/Vibration Information

		GSR 18V-55	GSB 18V-55
Noise emission values determined according to **EN 62841-2-1**.			
Typically, the A-weighted noise level of the power tool is			
Sound pressure level	dB(A)	**73**	**88**
Sound power level	dB(A)	**84**	**99**
Uncertainty K	dB	**5**	**5**
Wear hearing protection!			
Vibration total values a_h (triax vector sum) and uncertainty K determined according to **EN 62841-2-1**.			
Drilling:			
a_h	m/s^2	**<2.5**	**<2.5**
K	m/s^2	**1.5**	**1.5**
Impact drilling:			
a_h	m/s^2	–	**11.5**
K	m/s^2	–	**1.5**

The vibration level and noise emission value given in these instructions have been measured in accordance with a standardised measuring procedure and may be used to compare power tools. They may also be used for a preliminary estimation of vibration and noise emissions.

The stated vibration level and noise emission value represent the main applications of the power tool. However, if the power tool is used for other applications, with different application tools or is poorly maintained, the vibration level and noise emission value may differ. This may significantly increase the vibration and noise emissions over the total working period.

To estimate vibration and noise emissions accurately, the times when the tool is switched off or when it is running but not actually being used should also be taken into account. This may significantly reduce vibration and noise emissions over the total working period.

Implement additional safety measures to protect the operator from the effects of vibration, such as servicing the power tool and application tools, keeping their hands warm, and organising workflows correctly.

Assembly

▶ **Remove the battery from the power tool before carrying out work on the power tool (e.g. maintenance, changing tool, etc.). The battery should also be removed for transport and storage.** There is risk of injury from unintentionally pressing the on/off switch.

Charging the Battery

▶ **Use only the chargers listed in the technical data.** Only these chargers are matched to the lithium-ion battery of your power tool.

Note: The battery is supplied partially charged. To ensure full battery capacity, fully charge the battery in the charger before using your power tool for the first time.

The lithium-ion battery can be charged at any time without reducing its service life. Interrupting the charging process does not damage the battery.

The lithium-ion battery is protected against deep discharge by the "Electronic Cell Protection (ECP)". When the battery is discharged, the power tool is switched off by means of a protective circuit: The application tool no longer rotates.

Follow the instructions on correct disposal.

Removing the Battery

The battery **(7)** is equipped with two locking levels to prevent the battery from falling out when pushing the battery release button **(8)** unintentionally. As long as the battery is inserted in the power tool, it is held in position by means of a spring.

To remove the battery **(7)**, press the release button **(8)** and pull the battery out of the power tool. **Do not use force to do this.**

Battery charge indicator

The green LEDs on the battery charge indicator indicate the state of charge of the battery. For safety reasons, it is only possible to check the state of charge when the power tool is not in operation.

Press the button for the battery charge indicator On or to show the state of charge. This is also possible when the battery is removed.

If no LED lights up after pressing the button for the battery charge indicator, then the battery is defective and must be replaced.

Battery model GBA 18V...



LEDs	Capacity
3× continuous green light	60–100 %
2× continuous green light	30–60 %
1× continuous green light	5–30 %
1× flashing green light	0–5 %

Battery model ProCORE18V...



LEDs	Capacity
5× continuous green light	80–100 %
4× continuous green light	60–80 %
3× continuous green light	40–60 %
2× continuous green light	20–40 %
1× continuous green light	5–20 %
1× flashing green light	0–5 %

Changing the tool (see figure A)

- ▶ **Remove the battery from the power tool before carrying out work on the power tool (e.g. maintenance, changing tool, etc.). The battery should also be removed for transport and storage.** There is risk of injury from unintentionally pressing the on/off switch.

The drill spindle is locked when the on/off switch **(11)** is not pressed. This makes it possible to change the application tool in the drill chuck quickly, conveniently and easily.

Open the keyless chuck **(2)** by turning it in the direction of rotation ❶ until the tool can be inserted. Insert the tool.

Firmly tighten the keyless chuck **(2)** by turning it by hand in the direction of rotation ❷. This will automatically lock the drill chuck.

Dust/Chip Extraction

Dust from materials such as lead-containing coatings, some wood types, minerals and metal can be harmful to one's health. Touching or breathing-in the dust can cause allergic reactions and/or lead to respiratory infections of the user or bystanders.

Certain dust, such as oak or beech dust, is considered carcinogenic, especially in connection with wood-treatment additives (chromate, wood preservative). Materials containing asbestos may only be worked by specialists.

- – Provide for good ventilation of the working place.
- – It is recommended to wear a P2 filter-class respirator.

Observe the relevant regulations in your country for the materials to be worked.

- ▶ **Avoid dust accumulation at the workplace.** Dust can easily ignite.

Operation

Starting Operation

Inserting the battery

Note: The use of batteries unsuitable for your power tool can lead to malfunctions or damage to the power tool.

Push the charged battery **(7)** into the base of the power tool from the front until the battery is securely locked.

Setting the rotational direction (see figure B)

The rotational direction switch **(10)** is used to change the rotational direction of the power tool. However, this is not possible while the on/off switch **(11)** is being pressed.

Right rotation: To drill and to drive in screws, press the rotational direction switch **(10)** through to the left stop.

Left Rotation: To loosen and unscrew screws and nuts, press the rotational direction switch **(10)** through to the right stop.

Setting the operating mode

Drilling



GSR 18V-55
Set the torque presetting ring **(3)** to the "drilling" symbol.

GSB 18V-55
Set the operating mode presetting ring **(4)** to the "drilling" symbol.

Screwdriving



GSR 18V-55
Set the torque presetting ring **(3)** to the required torque.

GSB 18V-55
Set the operating mode presetting ring **(4)** to the "screwdriving" symbol.
Set the torque presetting ring **(3)** to the required torque.

Impact drilling



GSB 18V-55
Set the operating mode presetting ring **(4)** to the "impact drilling" symbol.

Switching on/off

To **start** the power tool, press and hold the on/off switch **(11)**.

The LED **(9)** lights up when the on/off switch **(11)** is lightly or fully pressed, meaning that the work area is illuminated in poor lighting conditions.

To **switch off** the power tool, release the on/off switch **(11)**.

Adjusting the speed

You can adjust the speed of the power tool when it is on by pressing in the on/off switch **(11)** to varying extents.

A light pressure on the on/off switch **(11)** results in a low rotational speed. Increased pressure on the switch causes an increase in speed.

Preselecting torque (applies to screwdriving mode)

The torque presetting ring **(3)** can be used to pre-select the required torque in 20 stages. Once the set torque has been reached, the tool will stop delivering power to the application.

Mechanical gear selection

- ▶ **Only operate the gear selector (5) when the power tool is not in use.**

First gear:

Low speed range; for working with a large drilling diameter or for screwdriving.

Second gear:

High speed range; for working with a small drilling diameter.

- ▶ **Always push the gear selector switch as far as it will go.** Otherwise, the power tool may become damaged.

Temperature-dependent overload protection

When used as intended, the power tool cannot be overloaded. In the event of overloading or the temperature rising/falling outside the permitted operating temperature range, the speed will be reduced. The power tool will not run at full speed again until the permitted operating temperature has been reached.

Fully automatic spindle lock (Auto-Lock)

The drill spindle, and therefore the tool holder **(1)**, are locked when the on/off switch **(11)** is not pressed.

This enables screws to be screwed in even when the battery **(7)** is empty and allows the power tool to be used as a screwdriver.

Practical advice

- ▶ **Only apply the power tool to the screw when the tool is switched off.** Rotating application tools can slip off.

Before screwing larger, longer screws into hard materials, it is advisable to pre-drill a pilot hole with the core diameter of the thread to approx. 2/3 of the screw length.

An auxiliary tool can be used to remove the screwdriver bit or universal bit holder.

Belt clip

You can use the belt clip **(6)** to hang the power tool on a belt, for example. You then have both hands free and the power tool is always at hand.

Maintenance and Service

Maintenance and Cleaning

- ▶ **Remove the battery from the power tool before carrying out work on the power tool (e.g. maintenance, changing tool, etc.). The battery should also be removed for transport and storage.** There is risk of injury from unintentionally pressing the on/off switch.
- ▶ **To ensure safe and efficient operation, always keep the power tool and the ventilation slots clean.**

After-Sales Service and Application Service

Our after-sales service responds to your questions concerning maintenance and repair of your product as well as spare parts. You can find explosion drawings and information on spare parts at: **www.bosch-pt.com**
The Bosch product use advice team will be happy to help you with any questions about our products and their accessories.

In all correspondence and spare parts orders, please always include the 10-digit article number given on the nameplate of the product.

Great Britain
Robert Bosch Ltd. (B.S.C.)
P.O. Box 98
Broadwater Park
North Orbital Road
Denham Uxbridge
UB 9 5HJ
At www.bosch-pt.co.uk you can order spare parts or arrange the collection of a product in need of servicing or repair.
Tel. Service: (0344) 7360109
E-Mail: boschservicecentre@bosch.com

You can find further service addresses at:
www.bosch-pt.com/serviceaddresses

Transport

The recommended lithium-ion batteries are subject to legislation on the transport of dangerous goods. The user can transport the batteries by road without further requirements.

BOSCH

GDR | GDX | GDS Professional HEAVY DUTY

18V-200

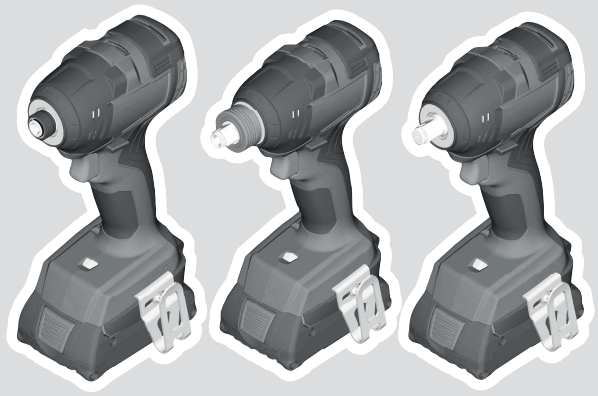

Robert Bosch Power Tools GmbH
70538 Stuttgart
GERMANY

www.bosch-pt.com

1 609 92A 8Y6 (2023.07) DOC / 225

1 609 92A 8Y6

de Originalbetriebsanleitung
en Original instructions
fr Notice originale
es Manual original
pt Manual original
it Istruzioni originali
nl Oorspronkelijke gebruiksaanwijzing
da Original brugsanvisning
sv Bruksanvisning i original
no Original driftsinstruks
fi Alkuperäiset ohjeet
el Πρωτότυπο οδηγιών χρήσης
tr Orijinal işletme talimatı
pl Instrukcja oryginalna
cs Původní návod k používání
sk Pôvodný návod na použitie
hu Eredeti használati utasítás
ru Оригинальное руководство по эксплуатации
uk Оригінальна інструкція з експлуатації
kk Пайдалану нұсқаулығының түпнұсқасы
ro Instrucţiuni originale
bg Оригинална инструкция
mk Оригинално упатство за работа
sr Originalno uputstvo za rad
sl Izvirna navodila
hr Originalne upute za rad
et Algupärane kasutusjuhend
lv Instrukcijas oriģinālvalodā
lt Originali instrukcija
ko 사용 설명서 원본
ar دليل التشغيل الأصلي
fa دفترچه راهنمای اصلی

Deutsch ..... Seite 5
English ..... Page 12
Français ..... Page 18
Español ..... Página 25
Português ..... Página 32
Italiano ..... Pagina 38
Nederlands ..... Pagina 45
Dansk ..... Side 51
Svensk ..... Sidan 57
Norsk ..... Side 63
Suomi ..... Sivu 69
Ελληνικά ..... Σελίδα 75
Türkçe ..... Sayfa 82
Polski ..... Strona 89
Čeština ..... Stránka 96
Slovenčina ..... Stránka 102
Magyar ..... Oldal 108
Русский ..... Страница 115
Українська ..... Сторінка 124
Қазақ ..... Бет 131
Română ..... Pagina 140
Български ..... Страница 146
Македонски ..... Страница 154
Srpski ..... Strana 161
Slovenščina ..... Stran 167
Hrvatski ..... Stranica 173
Eesti ..... Lehekülg 179
Latviešu ..... Lappuse 185
Lietuvių k. ..... Puslapis 192
한국어 ..... 페이지 198
عربي ..... الصفحة 205
فارسی ..... صفحه 212

CE / UKCA ..... I/i

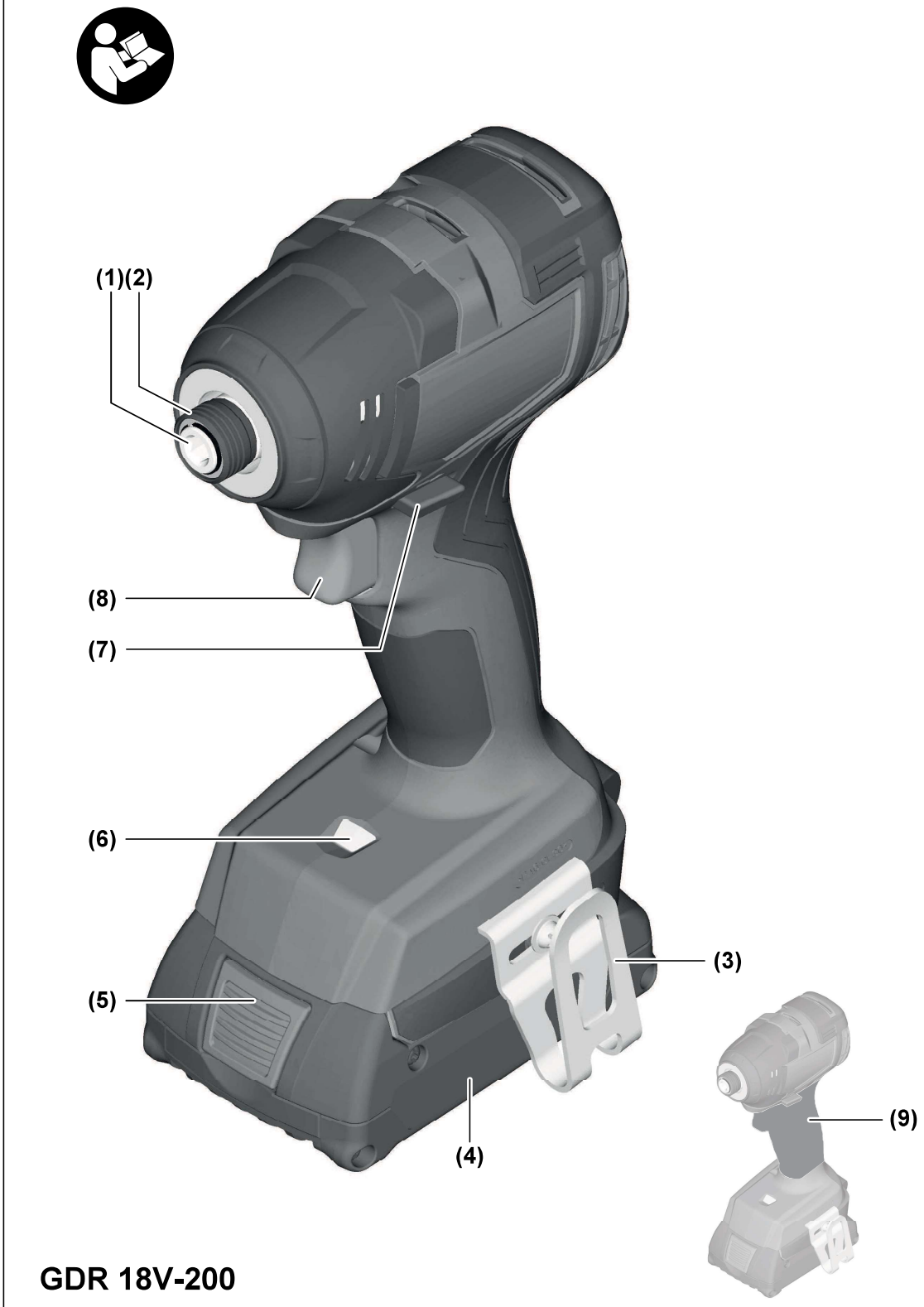

GDR 18V-200

A GDR...

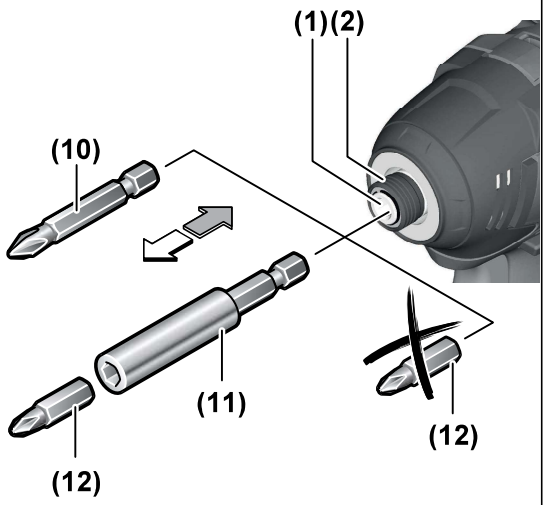

B GDX...

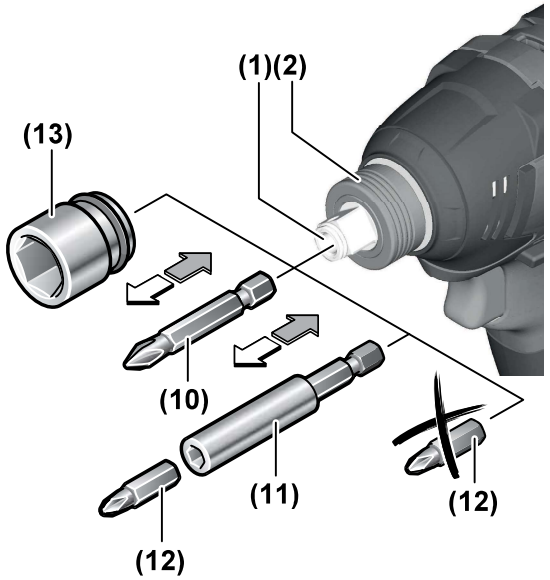

C GDS ...

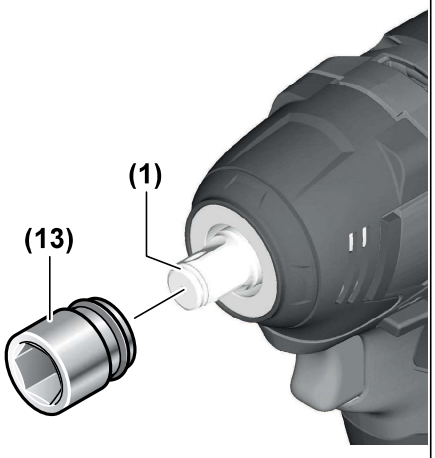

D

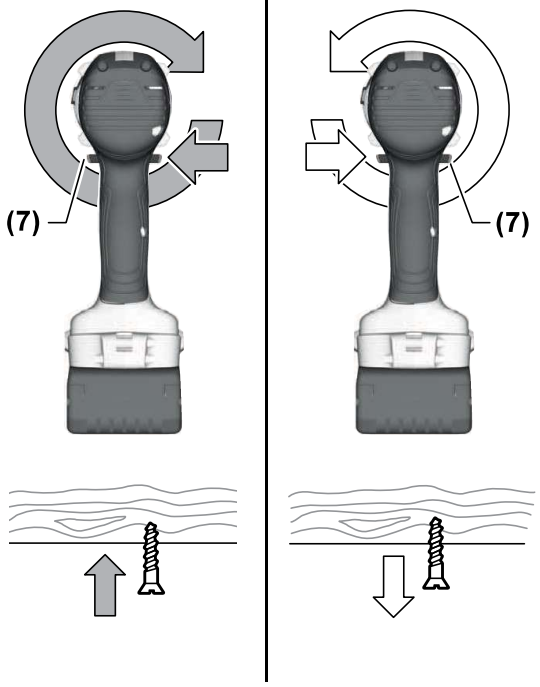

Deutsch

Sicherheitshinweise

Allgemeine Sicherheitshinweise für Elektrowerkzeuge

⚠ WARNUNG **Lesen Sie alle Sicherheitshinweise, Anweisungen, Bebilderungen und technischen Daten, mit denen dieses Elektrowerkzeug versehen ist.** Versäumnisse bei der Einhaltung der Sicherheitshinweise und nachfolgenden Anweisungen können elektrischen Schlag, Brand und/oder schwere Verletzungen verursachen.

Bewahren Sie alle Sicherheitshinweise und Anweisungen für die Zukunft auf.

Der in den Sicherheitshinweisen verwendete Begriff „Elektrowerkzeug“ bezieht sich auf netzbetriebene Elektrowerkzeuge (mit Netzleitung) und auf akkubetriebene Elektrowerkzeuge (ohne Netzleitung).

Arbeitsplatzsicherheit

- **Halten Sie Ihren Arbeitsbereich sauber und gut beleuchtet.** Unordnung oder unbeleuchtete Arbeitsbereiche können zu Unfällen führen.
- **Arbeiten Sie mit dem Elektrowerkzeug nicht in explosionsgefährdeter Umgebung, in der sich brennbare Flüssigkeiten, Gase oder Stäube befinden.** Elektrowerkzeuge erzeugen Funken, die den Staub oder die Dämpfe entzünden können.
- **Halten Sie Kinder und andere Personen während der Benutzung des Elektrowerkzeugs fern.** Bei Ablenkung können Sie die Kontrolle über das Elektrowerkzeug verlieren.

Elektrische Sicherheit

- **Der Anschlussstecker des Elektrowerkzeuges muss in die Steckdose passen. Der Stecker darf in keiner Weise verändert werden. Verwenden Sie keine Adapterstecker gemeinsam mit schutzgeerdeten Elektrowerkzeugen.** Unveränderte Stecker und passende Steckdosen verringern das Risiko eines elektrischen Schlages.
- **Vermeiden Sie Körperkontakt mit geerdeten Oberflächen wie von Rohren, Heizungen, Herden und Kühlschränken.** Es besteht ein erhöhtes Risiko durch elektrischen Schlag, wenn Ihr Körper geerdet ist.
- **Halten Sie Elektrowerkzeuge von Regen oder Nässe fern.** Das Eindringen von Wasser in ein Elektrowerkzeug erhöht das Risiko eines elektrischen Schlages.
- **Zweckentfremden Sie die Anschlussleitung nicht, um das Elektrowerkzeug zu tragen, aufzuhängen oder um den Stecker aus der Steckdose zu ziehen. Halten Sie die Anschlussleitung fern von Hitze, Öl, scharfen Kanten oder sich bewegenden Teilen.** Beschädigte oder verwickelte Anschlussleitungen erhöhen das Risiko eines elektrischen Schlages.
- **Wenn Sie mit einem Elektrowerkzeug im Freien arbeiten, verwenden Sie nur Verlängerungskabel, die auch für den Außenbereich geeignet sind.** Die Anwendung einer für den Außenbereich geeigneten Verlängerungsleitung verringert das Risiko eines elektrischen Schlages.
- **Wenn der Betrieb des Elektrowerkzeuges in feuchter Umgebung nicht vermeidbar ist, verwenden Sie einen Fehlerstromschutzschalter.** Der Einsatz eines Fehlerstromschutzschalters vermindert das Risiko eines elektrischen Schlages.

Sicherheit von Personen

- **Seien Sie aufmerksam, achten Sie darauf, was Sie tun, und gehen Sie mit Vernunft an die Arbeit mit einem Elektrowerkzeug. Benutzen Sie kein Elektrowerkzeug, wenn Sie müde sind oder unter dem Einfluss von Drogen, Alkohol oder Medikamenten stehen.** Ein Moment der Unachtsamkeit beim Gebrauch des Elektrowerkzeuges kann zu ernsthaften Verletzungen führen.
- **Tragen Sie persönliche Schutzausrüstung und immer eine Schutzbrille.** Das Tragen persönlicher Schutzausrüstung, wie Staubmaske, rutschfeste Sicherheitsschuhe, Schutzhelm oder Gehörschutz, je nach Art und Einsatz des Elektrowerkzeuges, verringert das Risiko von Verletzungen.
- **Vermeiden Sie eine unbeabsichtigte Inbetriebnahme. Vergewissern Sie sich, dass das Elektrowerkzeug ausgeschaltet ist, bevor Sie es an die Stromversorgung und/oder den Akku anschließen, es aufnehmen oder tragen.** Wenn Sie beim Tragen des Elektrowerkzeuges den Finger am Schalter haben oder das Gerät eingeschaltet an die Stromversorgung anschließen, kann dies zu Unfällen führen.
- **Entfernen Sie Einstellwerkzeuge oder Schraubenschlüssel, bevor Sie das Elektrowerkzeug einschalten.** Ein Werkzeug oder Schlüssel, der sich in einem drehenden Geräteteil befindet, kann zu Verletzungen führen.
- **Vermeiden Sie eine abnormale Körperhaltung. Sorgen Sie für einen sicheren Stand und halten Sie jederzeit das Gleichgewicht.** Dadurch können Sie das Elektrowerkzeug in unerwarteten Situationen besser kontrollieren.
- **Tragen Sie geeignete Kleidung. Tragen Sie keine weite Kleidung oder Schmuck. Halten Sie Haare und Kleidung fern von sich bewegenden Teilen.** Lockere Kleidung, Schmuck oder lange Haare können von sich bewegenden Teilen erfasst werden.
- **Wenn Staubabsaug- und -auffangeinrichtungen montiert werden können, sind diese anzuschließen und richtig zu verwenden.** Verwendung einer Staubabsaugung kann Gefährdungen durch Staub verringern.
- **Wiegen Sie sich nicht in falscher Sicherheit und setzen Sie sich nicht über die Sicherheitsregeln für Elektrowerkzeuge hinweg, auch wenn Sie nach vielfachem Gebrauch mit dem Elektrowerkzeug vertraut sind.** Achtloses Handeln kann binnen Sekundenbruchteilen zu schweren Verletzungen führen.

auch für Altgeräte, die in keiner äußeren Abmessung größer als 25 cm sind, die der Endnutzer zurückgeben will, ohne ein neues Gerät zu kaufen.

Akkus/Batterien:

Li-Ion:

Bitte beachten Sie die Hinweise im Abschnitt Transport (siehe „Transport“, Seite 11).

English

Safety Instructions

General Power Tool Safety Warnings

⚠ WARNING **Read all safety warnings, instructions, illustrations and specifications provided with this power tool.** Failure to follow all instructions listed below may result in electric shock, fire and/or serious injury.

Save all warnings and instructions for future reference.

The term "power tool" in the warnings refers to your mains-operated (corded) power tool or battery-operated (cordless) power tool.

Work area safety

- **Keep work area clean and well lit.** Cluttered or dark areas invite accidents.
- **Do not operate power tools in explosive atmospheres, such as in the presence of flammable liquids, gases or dust.** Power tools create sparks which may ignite the dust or fumes.
- **Keep children and bystanders away while operating a power tool.** Distractions can cause you to lose control.

Electrical safety

- **Power tool plugs must match the outlet. Never modify the plug in any way. Do not use any adapter plugs with earthed (grounded) power tools.** Unmodified plugs and matching outlets will reduce risk of electric shock.
- **Avoid body contact with earthed or grounded surfaces, such as pipes, radiators, ranges and refrigerators.** There is an increased risk of electric shock if your body is earthed or grounded.
- **Do not expose power tools to rain or wet conditions.** Water entering a power tool will increase the risk of electric shock.
- **Do not abuse the cord. Never use the cord for carrying, pulling or unplugging the power tool. Keep cord away from heat, oil, sharp edges or moving parts.** Damaged or entangled cords increase the risk of electric shock.
- **When operating a power tool outdoors, use an extension cord suitable for outdoor use.** Use of a cord suitable for outdoor use reduces the risk of electric shock.
- **If operating a power tool in a damp location is unavoidable, use a residual current device (RCD) protected supply.** Use of an RCD reduces the risk of electric shock.

Personal safety

- **Stay alert, watch what you are doing and use common sense when operating a power tool. Do not use a power tool while you are tired or under the influence of drugs, alcohol or medication.** A moment of inattention while operating power tools may result in serious personal injury.
- **Use personal protective equipment. Always wear eye protection.** Protective equipment such as a dust mask, non-skid safety shoes, hard hat or hearing protection used for appropriate conditions will reduce personal injuries.
- **Prevent unintentional starting. Ensure the switch is in the off-position before connecting to power source and/or battery pack, picking up or carrying the tool.** Carrying power tools with your finger on the switch or energising power tools that have the switch on invites accidents.
- **Remove any adjusting key or wrench before turning the power tool on.** A wrench or a key left attached to a rotating part of the power tool may result in personal injury.
- **Do not overreach. Keep proper footing and balance at all times.** This enables better control of the power tool in unexpected situations.
- **Dress properly. Do not wear loose clothing or jewellery. Keep your hair and clothing away from moving parts.** Loose clothes, jewellery or long hair can be caught in moving parts.
- **If devices are provided for the connection of dust extraction and collection facilities, ensure these are connected and properly used.** Use of dust collection can reduce dust-related hazards.
- **Do not let familiarity gained from frequent use of tools allow you to become complacent and ignore tool safety principles.** A careless action can cause severe injury within a fraction of a second.

Power tool use and care

- **Do not force the power tool. Use the correct power tool for your application.** The correct power tool will do the job better and safer at the rate for which it was designed.
- **Do not use the power tool if the switch does not turn it on and off.** Any power tool that cannot be controlled with the switch is dangerous and must be repaired.
- **Disconnect the plug from the power source and/or remove the battery pack, if detachable, from the power tool before making any adjustments, changing ac-**

cessories, or storing power tools. Such preventive safety measures reduce the risk of starting the power tool accidentally.

- **Store idle power tools out of the reach of children and do not allow persons unfamiliar with the power tool or these instructions to operate the power tool.** Power tools are dangerous in the hands of untrained users.
- **Maintain power tools and accessories. Check for misalignment or binding of moving parts, breakage of parts and any other condition that may affect the power tool's operation. If damaged, have the power tool repaired before use.** Many accidents are caused by poorly maintained power tools.
- **Keep cutting tools sharp and clean.** Properly maintained cutting tools with sharp cutting edges are less likely to bind and are easier to control.
- **Use the power tool, accessories and tool bits etc. in accordance with these instructions, taking into account the working conditions and the work to be performed.** Use of the power tool for operations different from those intended could result in a hazardous situation.
- **Keep handles and grasping surfaces dry, clean and free from oil and grease.** Slippery handles and grasping surfaces do not allow for safe handling and control of the tool in unexpected situations.

Battery tool use and care

- **Recharge only with the charger specified by the manufacturer.** A charger that is suitable for one type of battery pack may create a risk of fire when used with another battery pack.
- **Use power tools only with specifically designated battery packs.** Use of any other battery packs may create a risk of injury and fire.
- **When battery pack is not in use, keep it away from other metal objects, like paper clips, coins, keys, nails, screws or other small metal objects, that can make a connection from one terminal to another.** Shorting the battery terminals together may cause burns or a fire.
- **Under abusive conditions, liquid may be ejected from the battery; avoid contact. If contact accidentally occurs, flush with water. If liquid contacts eyes, additionally seek medical help.** Liquid ejected from the battery may cause irritation or burns.
- **Do not use a battery pack or tool that is damaged or modified.** Damaged or modified batteries may exhibit unpredictable behaviour resulting in fire, explosion or risk of injury.
- **Do not expose a battery pack or tool to fire or excessive temperature.** Exposure to fire or temperature above 130 °C may cause explosion.
- **Follow all charging instructions and do not charge the battery pack or tool outside the temperature range specified in the instructions.** Charging improperly or at temperatures outside the specified range may damage the battery and increase the risk of fire.

Service

- **Have your power tool serviced by a qualified repair person using only identical replacement parts.** This will ensure that the safety of the power tool is maintained.
- **Never service damaged battery packs.** Service of battery packs should only be performed by the manufacturer or authorized service providers.

Safety Warnings for Impact Wrenches

- **Hold the power tool by insulated gripping surfaces, when performing an operation where the fastener may contact hidden wiring.** Fasteners contacting a "live" wire may make exposed metal parts of the power tool "live" and could give the operator an electric shock.
- **Use suitable detectors to determine if there are hidden supply lines or contact the local utility company for assistance.** Contact with electric cables can cause fire and electric shock. Damaging gas lines can lead to explosion. Breaking water pipes causes property damage.
- **Hold the power tool securely.** When tightening and loosening screws be prepared for temporarily high torque reactions.
- **Secure the workpiece.** A workpiece clamped with clamping devices or in a vice is held more secure than by hand.
- **Always wait until the power tool has come to a complete stop before placing it down.** The application tool can jam and cause you to lose control of the power tool.
- **In case of damage and improper use of the battery, vapours may be emitted. The battery can set alight or explode.** Ensure the area is well ventilated and seek medical attention should you experience any adverse effects. The vapours may irritate the respiratory system.
- **Do not open the battery.** There is a risk of short-circuiting.
- **The battery can be damaged by pointed objects such as nails or screwdrivers or by force applied externally.** An internal short circuit may occur, causing the battery to burn, smoke, explode or overheat.
- **Only use the battery in the manufacturer's products.** This is the only way in which you can protect the battery against dangerous overload.





Protect the battery against heat, e.g. against continuous intense sunlight, fire, dirt, water and moisture. There is a risk of explosion and short-circuiting.

Product Description and Specifications



Read all the safety and general instructions. Failure to observe the safety and general instructions may result in electric shock, fire and/or serious injury.

Please observe the illustrations at the beginning of this operating manual.

Intended Use

The machine is intended for driving in and loosening screws and bolts as well as for tightening and loosening nuts within the respective range of dimension.

Product features

The numbering of the product features refers to the diagram of the power tool on the graphics page.

(1) Tool holder
(2) Locking sleeve
(3) Belt clip[a)]
(4) Rechargeable battery[a)]
(5) Battery release button[a)]
(6) Light
(7) Rotational direction switch
(8) On/off switch
(9) Handle (insulated gripping surface)
(10) Screwdriver bit with ball catch[a)]
(11) Universal bit holder[a)]
(12) Screwdriver bit[a)]
(13) Application tool (e.g. impact socket)[a)]

a) **Accessories shown or described are not included with the product as standard. You can find the complete selection of accessories in our accessories range.**

Technical Data

Cordless Impact Wrench		GDR 18V-200	GDX 18V-200	GDS 18V-200
Article number		**3 601 JJ2 1..**	**3 601 JJ2 2..**	**3 601 JJ2 3..**
Rated voltage	V=	18	18	18
No-load speed[A)]	min^{-1}	0–3 400	0–3 400	0–3 400
Impact rate[A)]	min^{-1}	0–4 000	0–4 200	0–4 200
Max. torque[A)]	Nm	200	200	200
Machine screw diameter	mm	M6–M16	M6–M16	M6–M16
Tool holder		¼" internal hexagon	¼" internal hexagon/ ■ ½"	■ ½"
Weight according to EPTA-Procedure 01:2014[B)]	kg	1.1–2.5	1.1–2.5	1.1–2.5
Recommended ambient temperature during charging	°C	0 to +35	0 to +35	0 to +35
Permitted ambient temperature during operation and during storage	°C	–20 to +50	–20 to +50	–20 to +50
Recommended rechargeable batteries		GBA 18V... ProCORE18V...	GBA 18V... ProCORE18V...	GBA 18V... ProCORE18V...
Recommended chargers		GAX 18... GAL 18... GAL 36...	GAX 18... GAL 18... GAL 36...	GAX 18... GAL 18... GAL 36...

A) Measured at 20–25 °C with rechargeable battery **GBA 18V 5.0Ah**.

B) Measured with **GBA 18V 1.5Ah** and **GBA 18V 12Ah**.

Values can vary depending upon the product and are subject to application and environmental conditions. For further information www.bosch-professional.com/wac.

Noise/Vibration Information

Noise emission values determined according to **EN 62841-2-2**.

Typically, the A-weighted noise level of the power tool is: Sound pressure level **95** dB(A); sound power level **106** dB(A). Uncertainty K = **3** dB.

Wear hearing protection!

Vibration total values a_h (triax vector sum) and uncertainty K determined according to **EN 62841-2-2**.

Impact tightening of fasteners of the maximum capacity of the tool:

GDR 18V-200: a_h = **14.0** m/s^2, K = **1.5** m/s^2
GDX 18V-200: a_h = **10.0** m/s^2, K = **1.5** m/s^2
GDS 18V-200: a_h = **9.0** m/s^2, K = **1.5** m/s^2

The vibration level and noise emission value given in these instructions have been measured in accordance with a standardised measuring procedure and may be used to compare power tools. They may also be used for a preliminary estimation of vibration and noise emissions.

The stated vibration level and noise emission value represent the main applications of the power tool. However, if the power tool is used for other applications, with different application tools or is poorly maintained, the vibration level

and noise emission value may differ. This may significantly increase the vibration and noise emissions over the total working period.

To estimate vibration and noise emissions accurately, the times when the tool is switched off or when it is running but not actually being used should also be taken into account. This may significantly reduce vibration and noise emissions over the total working period.

Implement additional safety measures to protect the operator from the effects of vibration, such as servicing the power tool and application tools, keeping their hands warm, and organising workflows correctly.

Assembly

- ▶ **Remove the battery from the power tool before carrying out work on the power tool (e.g. maintenance, changing tool, etc.). The battery should also be removed for transport and storage.** There is risk of injury from unintentionally pressing the on/off switch.

Charging the Battery

- ▶ **Use only the chargers listed in the technical data.** Only these chargers are matched to the lithium-ion battery of your power tool.

Note: The battery is supplied partially charged. To ensure full battery capacity, fully charge the battery in the charger before using your power tool for the first time.

The lithium-ion battery can be charged at any time without reducing its service life. Interrupting the charging process does not damage the battery.

The lithium-ion battery is protected against deep discharge by the "Electronic Cell Protection (ECP)". When the battery is discharged, the power tool is switched off by means of a protective circuit: The accessory no longer rotates.

- ▶ **Do not continue to press the On/Off switch after the power tool has automatically switched off.** The battery can be damaged.

Follow the instructions on correct disposal.

Removing the Battery

The battery **(4)** is equipped with two locking levels to prevent the battery from falling out when pushing the battery release button **(5)** unintentionally. As long as the battery is inserted in the power tool, it is held in position by means of a spring.

To remove the battery **(4)**, press the release button **(5)** and pull the battery out of the power tool. **Do not use force to do this.**

Battery charge indicator

The green LEDs on the battery charge indicator indicate the state of charge of the battery. For safety reasons, it is only possible to check the state of charge when the power tool is not in operation.

Press the button for the battery charge indicator On or to show the state of charge. This is also possible when the battery is removed.

If no LED lights up after pressing the button for the battery charge indicator, then the battery is defective and must be replaced.

Battery model GBA 18V...



LEDs	Capacity
3× continuous green light	60–100 %
2× continuous green light	30–60 %
1× continuous green light	5–30 %
1× flashing green light	0–5 %

Battery model ProCORE18V...



LEDs	Capacity
5× continuous green light	80–100 %
4× continuous green light	60–80 %
3× continuous green light	40–60 %
2× continuous green light	20–40 %
1× continuous green light	5–20 %
1× flashing green light	0–5 %

Changing the Tool

- ▶ **Remove the battery from the power tool before carrying out work on the power tool (e.g. maintenance, changing tool, etc.). The battery should also be removed for transport and storage.** There is risk of injury from unintentionally pressing the on/off switch.

Inserting the application tool (see figures A – B)

GDR 18V-200 / GDX 18V-200:

Pull the locking sleeve **(2)** forward, guide the application tool **(1)** into the tool holder as far as it will go and release the locking sleeve **(2)** to lock the application tool.

Impact-proof screwdriver bits **(12)** can be inserted using a universal bit holder **(11)** with ball catch.

Inserting the application tool (see figures B – C)

GDX 18V-200 / GDS 18V-200:

- ▶ **When working with an application tool, pay attention that the application tool is connected securely to the tool holder.** When the application tool is not securely connected with the tool holder, it can come off during application.

Slide the application tool **(13)** onto the square drive of the tool holder **(1)**.

Due to the way the system operates, the application tool **(13)** will move around slightly in the tool holder **(1)**; this has no influence on the function/safety.

Some application tools (e.g. double bits) cannot be safely secured in the tool holder.

Removing the application tool (see figures A – B)

Pull the locking sleeve **(2)** forward and remove the application tool.

Operation

Method of Operation

The tool holder **(1)** (with the application tool) is driven by an electric motor via a gear and impact mechanism.

The working procedure is divided into two phases: **Screwing in** and **tightening** (impact mechanism in action).

The impact mechanism is activated as soon as the screwed connection runs tight and load is therefore put on the motor. The impact mechanism then converts the power of the motor to steady rotary impacts. When loosening screws or nuts, the process is reversed.

Starting Operation

Inserting the battery

- ▶ **Use only original Bosch lithium-ion batteries with the voltage stated on the type plate of your power tool.** Using other batteries can lead to injuries and pose a fire hazard.

Set the rotational direction switch **(7)** to the middle position to avoid unintentionally switching it on. Insert the charged battery **(4)** into the handle until you feel it engage and it is flush with the handle.

Set the rotational direction (see figure D)

The rotational direction switch **(7)** is used to change the rotational direction of the power tool. However, this is not possible while the on/off switch **(8)** is being pressed.

Right rotation: To drive in screws and tighten nuts, press the rotational direction switch **(7)** through to the left stop.

Left Rotation: To loosen and unscrew screws and nuts, press the rotational direction switch **(7)** through to the right stop.

Switching on/off

To **start** the power tool, press and hold the on/off switch **(8)**.

The LED lights up when the on/off switch **(8)** is lightly or fully pressed, meaning that the work area is illuminated in poor lighting conditions.

To **switch off** the power tool, release the on/off switch **(8)**.

Adjusting the speed

You can adjust the speed of the power tool when it is on by pressing in the on/off switch **(8)** to varying extents.

A light pressure on the on/off switch **(8)** results in a low rotational speed. Increased pressure on the switch causes an increase in speed.

Practical advice

- ▶ **Only apply the power tool to the screw/nut when the tool is switched off.** Rotating tool inserts can slip off.

The torque depends on the impact duration. The maximum achieved torque results from the sum of all individual torques achieved through impact. Maximum torque is achieved after an impact duration of 6–10 seconds. After this duration, the tightening torque increases only minimally. The impact duration is to be determined for each required tightening torque. The tightening torque actually achieved should always be checked with a torque wrench.

Screw applications with hard, spring-loaded or soft seats

When the achieved torques in an impact series are measured during a test and transferred into a diagram, the result is the curve of a torque characteristic. The height of the curve corresponds with the maximum reachable torque, and the steepness indicates the duration in which this is achieved.

A torque gradient depends on the following factors:

- Strength properties of the screws/nuts
- Type of backing (washer, disc spring, seal)
- Strength properties of the material being screwed/bolted together
- Lubrication conditions at the screw/bolt connection

The following application cases result accordingly:

- A **hard seat** is a metal-to-metal screw application which uses washers. After a relatively short impact duration, the maximum torque is reached (steep characteristic curve). Unnecessary long impact duration only causes damage to the machine.
- A **spring-loaded seat** is also a metal-to-metal screw application but uses spring washers, disc springs, studs or screws/nuts with conical seats. It is also called a spring-loaded seat when extensions are used.
- A **soft seat** is a screw application of e.g. metal on wood or a screw application that uses lead washers or fibre washers as backing.

For a spring-loaded seat as well as for a soft seat, the maximum tightening torque is lower than for a hard seat. Also, a clearly longer impact duration is required.

Guide values for maximum screw tightening torques

Figures given in Nm; calculated from the tensional cross-section; utilization of the yield point: 90% (with friction coefficient μ_{total} = 0.12). As a control measure, always check the tightening torque with a torque wrench.

Property Classes according to DIN 267	Standard Screws/Bolts								High-strength Bolts		
	3.6	4.6	5.6	4.8	6.6	5.8	6.8	6.9	8.8	10.9	12.9
M6	2.71	3.61	4.52	4.8	5.42	6.02	7.22	8.13	9.7	13.6	16.2
M8	6.57	8.7	11	11.6	13.1	14.6	17.5	19.7	23	33	39
M10	13	17.5	22	23	26	29	35	39	47	65	78
M12	22.6	30	37.6	40	45	50	60	67	80	113	135
M14	36	48	60	65	72	79	95	107	130	180	215
M16	55	73	92	98	110	122	147	165	196	275	330

Tips

Before screwing larger, longer screws into hard materials, it is advisable to pre-drill a pilot hole with the core diameter of the thread to approx. 2/3 of the screw length.

Note: Ensure that no metal particles enter the power tool.

After working at a low speed for an extended period, you should operate the power tool at the maximum speed for approximately three minutes without load to cool it down.

Recommendations for optimal handling of the battery

Protect the battery against moisture and water.

Only store the battery within a temperature range of -20 to 50 °C. Do not leave the battery in your car in the summer, for example.

A significantly reduced operating time after charging indicates that the battery has deteriorated and must be replaced. Follow the instructions on correct disposal.

Belt clip

You can use the belt clip **(3)** to hang the power tool on a belt, for example. You then have both hands free and the power tool is always at hand.

Maintenance and Service

Maintenance and Cleaning

- ▶ **Clean the air vents on your power tool regularly.** The motor's fan will draw the dust inside the housing and excessive accumulation of powdered metal may cause electrical hazards.
- ▶ **Clean the tool holder (1) and locking sleeve (2) from time to time.**
- ▶ **Remove the battery from the power tool before carrying out work on the power tool (e.g. maintenance, changing tool, etc.). The battery should also be removed for transport and storage.** There is risk of injury from unintentionally pressing the on/off switch.
- ▶ **To ensure safe and efficient operation, always keep the power tool and the ventilation slots clean.**

After-Sales Service and Application Service

Our after-sales service responds to your questions concerning maintenance and repair of your product as well as spare parts. You can find explosion drawings and information on spare parts at: **www.bosch-pt.com**

The Bosch product use advice team will be happy to help you with any questions about our products and their accessories.

In all correspondence and spare parts orders, please always include the 10-digit article number given on the nameplate of the product.

Great Britain

Robert Bosch Ltd. (B.S.C.)
P.O. Box 98
Broadwater Park
North Orbital Road
Denham Uxbridge
UB 9 5HJ

At www.bosch-pt.co.uk you can order spare parts or arrange the collection of a product in need of servicing or repair.

Tel. Service: (0344) 7360109
E-Mail: boschservicecentre@bosch.com

You can find further service addresses at:

www.bosch-pt.com/serviceaddresses

Transport

The recommended lithium-ion batteries are subject to legislation on the transport of dangerous goods. The user can transport the batteries by road without further requirements.

When shipping by third parties (e.g.: by air transport or forwarding agency), special requirements on packaging and labelling must be observed. For preparation of the item being shipped, consulting an expert for hazardous material is required.

Dispatch battery packs only when the housing is undamaged. Tape or mask off open contacts and pack up the battery in such a manner that it cannot move around in the packaging. Please also observe the possibility of more detailed national regulations.

Disposal



Power tools, rechargeable batteries, accessories and packaging should be sorted for environmental-friendly recycling.



Do not dispose of power tools and batteries/rechargeable batteries into household waste!

Only for EU countries:

According to the Directive 2012/19/EU on waste electrical and electronic equipment and its transposition into national law, power tools that are no longer usable, and, according to the Directive 2006/66/EC, defective or drained batteries must be collected separately and disposed of in an environmentally correct manner.

If disposed incorrectly, waste electrical and electronic equipment may have harmful effects on the environment and human health, due to the potential presence of hazardous substances.

Only for United Kingdom:

According to The Waste Electrical and Electronic Equipment Regulations 2013 (SI 2013/3113) (as amended) and the Waste Batteries and Accumulators Regulations 2009 (SI 2009/890) (as amended), products that are no longer usable must be collected separately and disposed of in an environmentally friendly manner.

Battery packs/batteries:

Li-ion:

Please observe the notes in the section on transport (see "Transport", page 17).

Français

Consignes de sécurité

Avertissements de sécurité généraux pour l'outil électrique

⚠ AVERTISSEMENT **Lire tous les avertissements de sécurité, les instructions, les illustrations et les spécifications fournis avec cet outil électrique.** Ne pas suivre les instructions énumérées ci-dessous peut provoquer un choc électrique, un incendie et/ou une blessure sérieuse.

Conserver tous les avertissements et toutes les instructions pour pouvoir s'y reporter ultérieurement.

Le terme "outil électrique" dans les avertissements fait référence à votre outil électrique alimenté par le secteur (avec cordon d'alimentation) ou votre outil électrique fonctionnant sur batterie (sans cordon d'alimentation).

Sécurité de la zone de travail

- **Conserver la zone de travail propre et bien éclairée.** Les zones en désordre ou sombres sont propices aux accidents.
- **Ne pas faire fonctionner les outils électriques en atmosphère explosive, par exemple en présence de liquides inflammables, de gaz ou de poussières.** Les outils électriques produisent des étincelles qui peuvent enflammer les poussières ou les fumées.
- **Maintenir les enfants et les personnes présentes à l'écart pendant l'utilisation de l'outil électrique.** Les distractions peuvent vous faire perdre le contrôle de l'outil.

Sécurité électrique

- **Il faut que les fiches de l'outil électrique soient adaptées au socle. Ne jamais modifier la fiche de quelque façon que ce soit. Ne pas utiliser d'adaptateurs avec des outils électriques à branchement de terre.** Des fiches non modifiées et des socles adaptés réduisent le risque de choc électrique.
- **Éviter tout contact du corps avec des surfaces reliées à la terre telles que les tuyaux, les radiateurs, les cuisinières et les réfrigérateurs.** Il existe un risque accru de choc électrique si votre corps est relié à la terre.
- **Ne pas exposer les outils électriques à la pluie ou à des conditions humides.** La pénétration d'eau à l'intérieur d'un outil électrique augmente le risque de choc électrique.
- **Ne pas maltraiter le cordon. Ne jamais utiliser le cordon pour porter, tirer ou débrancher l'outil électrique. Maintenir le cordon à l'écart de la chaleur, du lubrifiant, des arêtes vives ou des parties en mouvement.** Des cordons endommagés ou emmêlés augmentent le risque de choc électrique.
- **Lorsqu'on utilise un outil électrique à l'extérieur, utiliser un prolongateur adapté à l'utilisation extérieure.** L'utilisation d'un cordon adapté à l'utilisation extérieure réduit le risque de choc électrique.
- **Si l'usage d'un outil électrique dans un emplacement humide est inévitable, utiliser une alimentation protégée par un dispositif à courant différentiel résiduel (RCD).** L'usage d'un RCD réduit le risque de choc électrique.

Sécurité des personnes

- **Rester vigilant, regarder ce que vous êtes en train de faire et faire preuve de bon sens dans votre utilisation de l'outil électrique. Ne pas utiliser un outil électrique lorsque vous êtes fatigué ou sous l'emprise de drogues, de l'alcool ou de médicaments.** Un moment d'inattention en cours d'utilisation d'un outil électrique peut entraîner des blessures graves.
- **Utiliser un équipement de protection individuelle. Toujours porter une protection pour les yeux.** Les équipements de protection individuelle tels que les masques contre les poussières, les chaussures de sécurité antidérapantes, les casques ou les protections auditives utilisés pour les conditions appropriées réduisent les blessures.
- **Éviter tout démarrage intempestif. S'assurer que l'interrupteur est en position arrêt avant de brancher l'outil au secteur et/ou au bloc de batteries, de le ramasser ou de le porter.** Porter les outils électriques en ayant le doigt sur l'interrupteur ou brancher des outils électriques dont l'interrupteur est en position marche est source d'accidents.
- **Retirer toute clé de réglage avant de mettre l'outil électrique en marche.** Une clé laissée fixée sur une par-

BOSCH

GBA 18V

Robert Bosch Power Tools GmbH
70538 Stuttgart
GERMANY

www.bosch-pt.com

1 609 92A 7EH (2022.05) DOC / 197

1 609 92A 7EH

AMPShare

Powered by BOSCH



Deutsch ..... Seite 4
English ..... Page 9
Français ..... Page 15
Español ..... Página 22
Português ..... Página 27
Italiano ..... Pagina 33
Nederlands ..... Pagina 38
Dansk ..... Side 44
Svensk ..... Sidan 48
Norsk ..... Side 53
Suomi ..... Sivu 58
Ελληνικά ..... Σελίδα 63
Türkçe ..... Sayfa 69
Polski ..... Strona 74
Čeština ..... Stránka 80
Slovenčina ..... Stránka 85
Magyar ..... Oldal 90
Русский ..... Страница 96
Українська ..... Сторінка 105

Nur für EU-Länder:

Gemäß der europäischen Richtlinie 2006/66/EG müssen defekte oder verbrauchte Akkus getrennt gesammelt und einer umweltgerechten Wiederverwendung zugeführt werden.

English

Safety instructions



Read all the safety information and general instructions. Failure to observe the safety information and general instructions may result in electric shock, fire and/or serious injury.

Keep all the safety information and general instructions for future reference.

- ▶ **These safety instructions apply only to 18 V Bosch Li-ion AMPShare rechargeable batteries**
- ▶ **Use the rechargeable battery only in products from AMPShare partners.** 18 V rechargeable batteries labelled with AMPShare are fully compatible with the following

products:
– All products of the Bosch Professional 18V System
– All 18 V products from AMPShare partners

- ▶ **Observe the battery recommendations in the operating manual of your product.** Only this way can the rechargeable battery and the product be operated without danger and the rechargeable batteries protected from hazardous overloading.
- ▶ **Only charge the batteries using chargers recommended by the manufacturer or AMPShare partners.** A charger that is suitable for one type of battery may pose a fire risk when used with a different battery.

Battery type	Compatible chargers
GBA 18V... , ProCORE18V...	GAL 18..., GAL 36..., GAX 18...

- ▶ **The battery is supplied partially charged.** To ensure full battery capacity, fully charge the battery in the charger before using your power tool for the first time.
- ▶ **Keep battery packs out of the reach of children.**
- ▶ **Do not open the battery.** There is a risk of short-circuiting.

- **In case of damage and improper use of the battery, vapours may be emitted. The battery can set alight or explode.** Ensure the area is well ventilated and seek medical attention should you experience any adverse effects. The vapours may irritate the respiratory system.
- **If used incorrectly or if the battery is damaged, flammable liquid may be ejected from the battery. Contact with this liquid should be avoided. If contact accidentally occurs, rinse off with water. If the liquid comes into contact with your eyes, seek additional medical attention.** Liquid ejected from the battery may cause irritation or burns.
- **If the battery is damaged liquid can be ejected and cover nearby surfaces. Check affected parts.** Clean these parts or change them if necessary.
- **Do not short-circuit the battery pack. When the battery pack is not in use, keep it away from other metal objects, like paper clips, coins, keys, nails, screws or other small metal objects, that can make a connection from one terminal to another.** Shorting the battery terminals together may cause burns or a fire.

- **The battery can be damaged by pointed objects such as nails or screwdrivers or by force applied externally.** An internal short circuit may occur, causing the battery to burn, smoke, explode or overheat.
- **Never service damaged battery packs.** Service of battery packs should only be performed by the manufacturer or authorized service providers.





Protect the battery against heat, e.g. against continuous intense sunlight, fire, dirt, water and moisture. There is a risk of explosion and short-circuiting.

- **Only operate and store the battery at an ambient temperature between -20 °C and +50 °C.** Do not leave the battery in your car in the summer, for example. At temperatures of < 0 °C some devices may experience a loss of power.
- **Only charge the battery at an ambient temperature which is between 0 °C and +35 °C. Only charge the rechargeable battery with a USB cable at an ambient temperature which is between +10 °C and +35 °C.** Charging outside of this temperature range can increase the

risk of damage to the battery and pose a fire hazard.

Maintenance and Service

Maintenance and Cleaning

Occasionally clean the ventilation slots and the terminals on the battery using a soft brush that is clean and dry.

▶ Do not use any chemical substances to clean the rechargeable battery.

Transport

Lithium-ion batteries are subject to the Dangerous Goods Legislation requirements. The batteries are suitable for road-transport by the user without further restrictions.

When shipping by third parties (e.g.: by air transport or forwarding agency), special requirements on packaging and labelling must be observed. For preparation of the item being shipped, consulting an expert for hazardous material is required.

Dispatch battery packs only when the housing is undamaged. Tape or mask off open contacts and pack up the battery in such a manner that it cannot move around in the packaging. Please also observe

the possibility of more detailed national regulations.

Disposal



Do not dispose of batteries with household waste!

Batteries and packaging should be sorted for environmentally friendly recycling.

Only for EU countries:

According to the Directive 2006/66/EC, defective or used battery packs/batteries, must be collected separately and disposed of in an environmentally correct manner.

Only for United Kingdom:

According to the Waste Batteries and Accumulators Regulations 2009 (2009/890), battery packs/batteries that are no longer usable must be collected separately and disposed of in an environmentally friendly manner.

Français

Consignes de sécurité



Lisez attentivement toutes les instructions et consignes de sécurité. Le non-respect des instructions et consignes de sécurité peut provoquer un choc électrique, un incendie et/ou entraîner de graves blessures.

Conservez toutes les consignes de sécurité et toutes les instructions pour pouvoir s'y reporter ultérieurement.

- ▶ **Ces consignes de sécurité ne s'appliquent que pour les accus Lithium-Ion 18 V AMP-Share Bosch**
- ▶ **N'utilisez l'accu qu'avec des produits des partenaires AMPShare.** Les accus 18 V avec le marquage AMPShare sont pleinement compatibles avec les produits suivants :
  - tous les produits du Bosch Professional 18V System
  - tous les produits 18 V des partenaires AMP-Share
- ▶ **N'utilisez que les accus recommandés dans la notice d'utilisation de votre produit.** Cela

garantit une utilisation sans danger de l'accu et du produit et exclut tout risque de surcharge dangereuse.

- ▶ **Ne chargez les accus qu'avec les chargeurs préconisés par le fabricant ou le partenaire AMPShare.** Un chargeur conçu pour un type d'accu bien spécifique peut provoquer un incendie lorsqu'il est utilisé pour charger d'autres accus.

Type d'accu	Chargeurs compatibles
GBA 18V... , ProCORE18V...	GAL 18..., GAL 36..., GAX 18...

- ▶ **La batterie est livrée partiellement chargée.** Pour obtenir les performances maximales, chargez la batterie jusqu'à sa pleine capacité avant la première utilisation.
- ▶ **Conservez les batteries hors de la portée des enfants.**
- ▶ **N'ouvrez pas l'accu.** Risque de court-circuit.
- ▶ **Si l'accu est endommagé ou utilisé de manière non conforme, des vapeurs peuvent s'échapper. L'accu peut brûler ou exploser.** Ventilez le local et consultez un médecin en cas de malaise. Les vapeurs peuvent entraîner des irritations des voies respiratoires.

BOSCH

GAL 18V-40 Professional



AMPShare™ Powered by BOSCH

Online
operating instructions

Robert Bosch Power Tools GmbH
70538 Stuttgart • GERMANY

www.bosch-professional.com

1 609 92A 8NL (2023.09) TAG / 72

1 609 92A 8NL

de Originalbetriebsanleitung
en Original instructions
fr Notice originale
es Manual original
pt Manual original
it Istruzioni originali
nl Oorspronkelijke gebruiksaanwijzing
da Original brugsanvisning
sv Bruksanvisning i original
no Original driftsinstruks
fi Alkuperäiset ohjeet
el Πρωτότυπο οδηγιών χρήσης
tr Orijinal işletme talimatı
pl Instrukcja oryginalna
cs Původní návod k používání
sk Pôvodný návod na použitie
hu Eredeti használati utasítás
ru Оригинальное руководство по эксплуатации
uk Оригінальна інструкція з експлуатації
kk Пайдалану нұсқаулығының түпнұсқасы
ka ორიგინალი ექსპლუატაციის ინსტრუქცია
ro Instrucţiuni originale
bg Оригинална инструкция
mk Оригинално упатство за работа
sq Manuali origjinal i përdorimit
sr Originalno uputstvo za rad
sl Izvirna navodila
hr Originalne upute za rad
et Algupärane kasutusjuhend
lv Instrukcijas oriģinālvalodā
lt Originali instrukcija
ko 사용 설명서 원본
ar دليل التشغيل الأصلي
fa دفترچه راهنمای اصلی

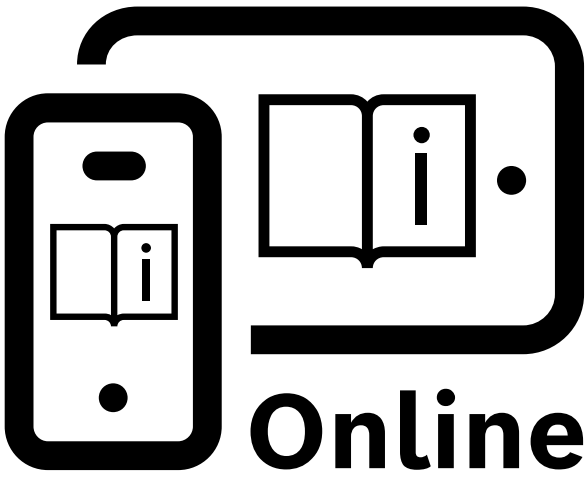

Online
operating instructions

Scannen Sie für weitere Informationen

Scan for more information

Scannez pour plus d’informations

Escanee para más informaciónes

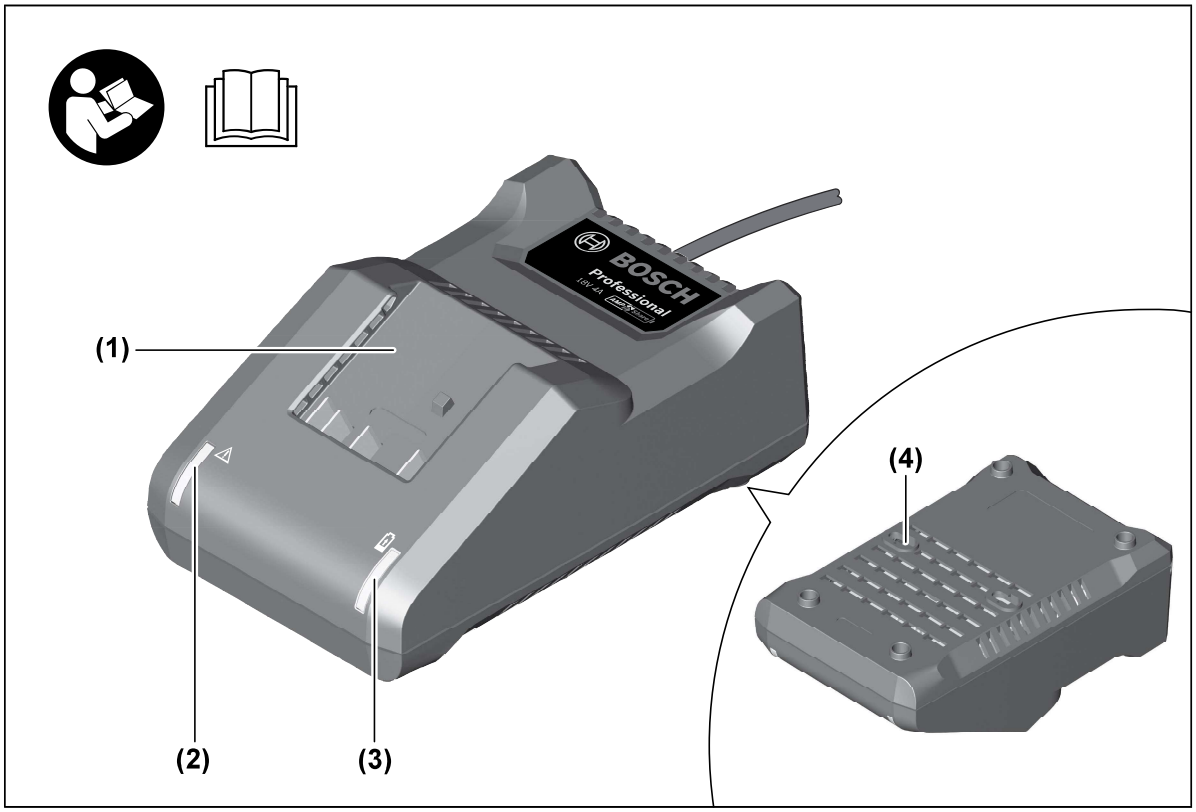
(1)
(2)
(3)
(4)
BOSCH
Professional

Deutsch ..... Seite 5
English ..... Page 7
Français ..... Page 9
Español ..... Página 11
Português ..... Página 13
Italiano ..... Pagina 14
Nederlands ..... Pagina 16
Dansk ..... Side 18
Svensk ..... Sidan 20
Norsk ..... Side 21
Suomi ..... Sivu 23
Ελληνικά ..... Σελίδα 25
Türkçe ..... Sayfa 26
Polski ..... Strona 29
Čeština ..... Stránka 31
Slovenčina ..... Stránka 33
Magyar ..... Oldal 34
Русский ..... Страница 36
Українська ..... Сторінка 39
Қазақ ..... Бет 41
ქართული ..... გვ. 43
Română ..... Pagina 46
Български ..... Страница 48
Македонски ..... Страница 50
Shqip ..... Faqe 52
Srpski ..... Strana 53
Slovenščina ..... Stran 55
Hrvatski ..... Stranica 57
Eesti ..... Lehekülg 58
Latviešu ..... Lappuse 60
Lietuvių k. ..... Puslapis 62
한국어 ..... 페이지 64
عربي ..... الصفحة 66
فارسی ..... صفحه 68

Deutsch

Sicherheitshinweise




Lesen Sie alle Sicherheitshinweise und Anweisungen. Versäumnisse bei der Einhaltung der Sicherheitshinweise und Anweisungen können elektrischen Schlag, Brand und/oder schwere Verletzungen verursachen.

Bewahren Sie diese Anweisungen gut auf.

Benutzen Sie das Ladegerät nur, wenn Sie alle Funktionen voll einschätzen und ohne Einschränkungen durchführen können oder entsprechende Anweisungen erhalten haben.

- **Dieses Ladegerät ist nicht vorgesehen für die Benutzung durch Kinder und Personen mit eingeschränkten physischen, sensorischen oder geistigen Fähigkeiten oder mangelnder Erfahrung und Wissen. Dieses Ladegerät kann von Kindern ab 8 Jahren und Personen mit eingeschränkten physischen, sensorischen oder geistigen Fähigkeiten oder mangelnder Erfahrung und Wissen benutzt werden, wenn sie durch eine für ihre Sicherheit verantwortliche Person beaufsichtigt werden oder von dieser im sicheren Umgang mit dem Ladegerät eingewiesen worden sind und die damit verbundenen Gefahren verstehen.** Andernfalls besteht die Gefahr von Fehlbedienung und Verletzungen.
- **Beaufsichtigen Sie Kinder bei Benutzung, Reinigung und Wartung.** Damit wird sichergestellt, dass Kinder nicht mit dem Ladegerät spielen.
- **Laden Sie nur Bosch Li-Ionen-Akkus oder Akkus der AMPShare-Partner ab einer Kapazität von 1,3 Ah. Die Akkuspannung muss zur Akku-Ladespannung des Ladegerätes passen. Laden Sie keine nicht wiederaufladbaren Akkus.** Ansonsten besteht Brand- und Explosionsgefahr.

Benutzen Sie das Ladegerät nur in geschlossenen Räumen und halten Sie es von Nässe fern. Das Eindringen von Wasser in ein Ladegerät erhöht das Risiko eines elektrischen Schlages.

- **Halten Sie das Ladegerät sauber.** Durch Verschmutzung besteht die Gefahr eines elektrischen Schlages.
- **Überprüfen Sie vor jeder Benutzung Ladegerät inkl. Kabel und Stecker. Benutzen Sie das Ladegerät nicht, sofern Sie Schäden feststellen. Öffnen Sie das Ladegerät nicht selbst und lassen Sie es nur von Bosch oder von autorisierten Kundendienststellen und nur mit Original-Ersatzteilen reparieren.** Beschädigte Ladegeräte, Kabel und Stecker erhöhen das Risiko eines elektrischen Schlages.
- **Betreiben Sie das Ladegerät nicht auf leicht brennbarem Untergrund (z.B. Papier, Textilien etc.) bzw. in brennbarer Umgebung.** Wegen der beim Laden auftretenden Erwärmung des Ladegerätes besteht Brandgefahr.
- **Decken Sie die Lüftungsschlitze des Ladegerätes nicht ab.** Das Ladegerät kann sonst überhitzen und nicht mehr ordnungsgemäß funktionieren.
- **Laden Sie die Akkus nur mit Ladegeräten auf, die vom Hersteller empfohlen werden.** Durch ein Ladegerät, das für eine bestimmte Art von Akkus geeignet ist, besteht Brandgefahr, wenn es mit anderen Akkus verwendet wird.
- **Bei Beschädigung und unsachgemäßem Gebrauch des Akkus können auch Dämpfe austreten.** Führen Sie Frischluft zu und suchen Sie bei Beschwerden einen Arzt auf. Die Dämpfe können die Atemwege reizen.
- **Bei falscher Anwendung kann Flüssigkeit aus dem Akku austreten. Vermeiden Sie den Kontakt damit. Bei zufälligem Kontakt mit Wasser abspülen. Wenn die Flüssigkeit in die Augen kommt, nehmen Sie zusätzliche ärztliche Hilfe in Anspruch.** Austretende Akkuflüssigkeit kann zu Hautreizungen oder Verbrennungen führen.

Produkt- und Leistungsbeschreibung

Bestimmungsgemäßer Gebrauch

Das Ladegerät ist bestimmt zum Laden von wiederaufladbaren Bosch Li-Ionen-Akkus oder denen der AMPShare-Partner.

Abgebildete Komponenten

(1) Ladeschacht
(2) rote Anzeige Temperaturüberwachung/Fehler
(3) grüne Ladezustandsanzeige
(4) Wandaufhängung

Technische Daten

Ladegerät	GAL 18V-40
Schutzklasse	⧈ / II
Ladestrom[A)]	4,0 A
Akku-Ladespannung (automatische Spannungserkennung)	10,8–18 V ⎓

A) abhängig von Temperatur und Akkutyp

Werte können je nach Produkt variieren und Anwendungs- sowie Umweltbedingungen unterliegen. Weitere Informationen unter www.bosch-professional.com/wac.

Ladevorgang

- **Beachten Sie die Netzspannung!** Die Spannung der Stromquelle muss mit den Angaben auf dem Typenschild des Ladegerätes übereinstimmen.

Der Ladevorgang beginnt, sobald der Netzstecker des Ladegerätes in die Steckdose gesteckt und der Akku in den Ladeschacht **(1)** eingesteckt wird.

Der Ladevorgang ist nur möglich, wenn die Temperatur des Akkus im zulässigen Ladetemperaturbereich ist (0–45 °C).

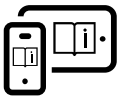

Für zusätzliche Informationen besuchen Sie die Online-Betriebsanleitung:
www.bosch-pt.com/manuals

Wandmontage

▶ Ziehen Sie vor allen Arbeiten am Ladegerät den Netzstecker aus der Steckdose.

Das Ladegerät kann entweder stehend (Tischbetrieb) oder hängend an der Wand betrieben werden.
Zur Befestigung an der Wand: Setzen Sie 2 Bohrlöcher im Abstand von **72 mm**. Verwenden Sie zur Befestigung Rundkopfschrauben mit einem Durchmesser von 5 mm bis max. 6,5 mm.

Fehlerbehebung

Akku wird nicht geladen

Akku wird nicht geladen und die rote Anzeige Temperaturüberwachung/Fehler (2) blinkt rot.
Ursache: Ladegerät hat einen internen Fehler festgestellt.
Abhilfe: Stellen Sie sicher, dass alle Akkus vollständig eingesteckt sind. Ziehen Sie den Netzstecker und stecken ihn wieder ein. Falls der Fehler erneut auftritt, lassen Sie das Ladegerät von einer autorisierten Kundendienststelle für **Bosch**-Elektrowerkzeuge überprüfen.

Anzeigen leuchten nicht

Keine Anzeige leuchtet, Akku wird nicht geladen.
Ursache: Steckdose, Netzkabel oder Ladegerät defekt
Abhilfe: Überprüfen Sie die Netzspannung. Lassen Sie das Ladegerät gegebenenfalls von einer autorisierten Kundendienststelle überprüfen.

Wartung und Service

Wartung und Reinigung

Wenn ein Ersatz der Anschlussleitung erforderlich ist, dann ist dies von **Bosch** oder einer autorisierten Kundendienststelle für **Bosch**-Elektrowerkzeuge auszuführen, um Sicherheitsgefährdungen zu vermeiden.

Kundendienst und Anwendungsberatung

Der Kundendienst beantwortet Ihre Fragen zu Reparatur und Wartung Ihres Produkts sowie zu Ersatzteilen. Explosionszeichnungen und Informationen zu Ersatzteilen finden Sie auch unter: **www.bosch-pt.com**
Das Bosch-Anwendungsberatungs-Team hilft Ihnen gerne bei Fragen zu unseren Produkten und deren Zubehör.
Geben Sie bei allen Rückfragen und Ersatzteilbestellungen bitte unbedingt die 10-stellige Sachnummer laut Typenschild des Produkts an.

Deutschland
Robert Bosch Power Tools GmbH
Servicezentrum Elektrowerkzeuge
Zur Luhne 2
37589 Kalefeld – Willershausen
Kundendienst: Tel.: (0711) 400 40 460
E-Mail: Servicezentrum.Elektrowerkzeuge@de.bosch.com
Unter www.bosch-pt.de können Sie online Ersatzteile bestellen oder Reparaturen anmelden.
Anwendungsberatung:
Tel.: (0711) 400 40 460
Fax: (0711) 400 40 462
E-Mail: kundenberatung.ew@de.bosch.com

Weitere Serviceadressen finden Sie unter:

www.bosch-pt.com/serviceaddresses

Entsorgung

Ladegeräte, Zubehör und Verpackungen sollen einer umweltgerechten Wiederverwertung zugeführt werden.



Werfen Sie Ladegeräte nicht in den Hausmüll!

Nur für EU-Länder:

Gemäß der Europäischen Richtlinie 2012/19/EU über Elektro- und Elektronik-Altgeräte und ihrer Umsetzung in nationales Recht müssen nicht mehr gebrauchsfähige Ladegeräte getrennt gesammelt und einer umweltgerechten Wiederverwertung zugeführt werden.

Bei unsachgemäßer Entsorgung können Elektro- und Elektronik-Altgeräte aufgrund des möglichen Vorhandenseins gefährlicher Stoffe schädliche Auswirkungen auf die Umwelt und die menschliche Gesundheit haben.

Nur für Deutschland:

Informationen zur Rücknahme von Elektro-Altgeräten für private Haushalte
Wie im Folgenden näher beschrieben, sind bestimmte Vertreiber zur unentgeltlichen Rücknahme von Altgeräten verpflichtet.

Vertreiber mit einer Verkaufsfläche für Elektro- und Elektronikgeräte von mindestens 400 m^2 sowie Vertreiber von Lebensmitteln mit einer Gesamtverkaufsfläche von mindestens 800 m^2, die mehrmals im Kalenderjahr oder dauerhaft Elektro- und Elektronikgeräte anbieten und auf dem Markt bereitstellen, sind verpflichtet,

1. bei der Abgabe eines neuen Elektro- oder Elektronikgeräts an einen Endnutzer ein Altgerät des Endnutzers der gleichen Geräteart, das im Wesentlichen die gleichen Funktionen wie das neue Gerät erfüllt, am Ort der Abgabe oder in unmittelbarer Nähe hierzu unentgeltlich zurückzunehmen; Ort der Abgabe ist auch der private Haushalt, sofern dort durch Auslieferung die Abgabe erfolgt: In diesem Fall ist die Abholung des Altgeräts für den Endnutzer unentgeltlich; und

2. auf Verlangen des Endnutzers Altgeräte, die in keiner äußeren Abmessung größer als 25 cm sind, im Einzelhandelsgeschäft oder in unmittelbarer Nähe hierzu unentgeltlich zurückzunehmen; die Rücknahme darf nicht an den Kauf eines Elektro- oder Elektronikgerätes geknüpft werden und ist auf drei Altgeräte pro Geräteart beschränkt.

Der Vertreiber hat beim Abschluss des Kaufvertrags für das neue Elektro- oder Elektronikgerät den Endnutzer über die Möglichkeit zur unentgeltlichen Rückgabe bzw. Abholung des Altgeräts zu informieren und den Endnutzer nach seiner Absicht zu befragen, ob bei der Auslieferung des neuen Geräts ein Altgerät zurückgegeben wird.

Dies gilt auch bei Vertrieb unter Verwendung von Fernkommunikationsmitteln, wenn die Lager- und Versandflächen für Elektro- und Elektronikgeräte mindestens 400 m^2 betragen oder die gesamten Lager- und Versandflächen mindestens 800 m^2 betragen, wobei die unentgeltliche Abholung auf Elektro- und Elektronikgeräte der Kategorien 1 (Wärmeüberträger), 2 (Bildschirmgeräte) und 4 (Großgeräte mit mindestens einer äußeren Abmessung über 50 cm) beschränkt ist. Für alle übrigen Elektro- und Elektronikgeräte muss der Vertreiber geeignete Rückgabemöglichkeiten in zumutbarer Entfernung zum jeweiligen Endnutzer gewährleisten; das gilt auch für Altgeräte, die in keiner äußeren Abmessung größer als 25 cm sind, die der Endnutzer zurückgeben will, ohne ein neues Gerät zu kaufen.

English

Safety instructions




Read all the safety and general instructions. Failure to observe the safety and general instructions may result in electric shock, fire and/or serious injury.

Store these instructions in a safe place.

Only use the charger if you can fully evaluate all functions and carry them out without restrictions, or if you have received corresponding instructions.

- **This charger is not intended for use by children or persons with physical, sensory or mental limitations or a lack of experience or knowledge. This charger can be used by children aged 8 or older and by persons who have physical, sensory or mental limitations or a lack of experience or knowledge if a person responsible for their safety supervises them or has instructed them in the safe operation of the charger and they understand the associated dangers.** Otherwise, there is a risk of operating errors and injuries.
- **Supervise children during use, cleaning and maintenance.** This will ensure that children do not play with the charger.
- **Only charge Bosch Li-ion batteries or batteries of AMPShare partners with a capacity of 1.3 Ah or more. The battery voltage must match the battery charging voltage of the charger. Do not charge any non-rechargeable batteries.** Otherwise there is a risk of fire and explosion.

Only use the charger in enclosed spaces and do not expose it to wet conditions. Water entering a charger increases the risk of electric shock.

- **Keep the charger clean.** Dirt poses a risk of electric shock.
- **Always check the charge, including the cable and plug, before use. Stop using the charger if you discover any damage. Do not open the charger yourself, and have it repaired only by Bosch or by an authorised after-sales service centre using only original replacement parts.** Damaged chargers, cables and plugs increase the risk of electric shock.
- **Do not operate the charger on an easily ignited surface (e.g. paper, textiles, etc.) or in a flammable environment.** There is a risk of fire due to the charger heating up during operation.
- **Do not cover the ventilation slots of the charger.** Otherwise, the charger may overheat and no long function properly.
- **Recharge only with the charger specified by the manufacturer.** A charger that is suitable for one type of battery pack may create a risk of fire when used with another battery pack.
- **In case of damage and improper use of the battery, vapours may also be emitted.** Ensure the area is well-ventilated and seek medical attention should you experience any adverse effects. The vapours may irritate the respiratory system.
- **Under abusive conditions, liquid may be ejected from the battery; avoid contact. If contact accidentally occurs, flush with water. If liquid contacts eyes, additionally seek medical help.** Liquid ejected from the battery may cause irritation or burns.

Products sold in GB only:

Your product is fitted with an BS 1363/A approved electric plug with internal fuse (ASTA approved to BS 1362).

If the plug is not suitable for your socket outlets, it should be cut off and an appropriate plug fitted in its place by an authorised customer service agent. The replacement plug should have the same fuse rating as the original plug.

The severed plug must be disposed of to avoid a possible shock hazard and should never be inserted into a mains socket elsewhere.

Product description and specifications

Intended use

The battery charger is intended for charging rechargeable Bosch Li-Ion batteries or those of the AMPShare partners.

Product Features

(1) Charging bay
(2) Red temperature monitoring/error indicator
(3) Green battery charge indicator
(4) Wall mount

Technical Data

Battery Charger	GAL 18V-40
Protection class	⧈ / II
Charging current[A)]	4.0 A
Battery charging voltage (automatic voltage detection)	10.8–18 V ⎓

A) Depends on temperature and rechargeable battery type

Values can vary depending upon the product and are subject to application and environmental conditions. For further information www.bosch-professional.com/wac.

Charging process

▶ **Pay attention to the mains voltage.** The voltage of the power source must match the voltage specified on the rating plate of the charger.

The charging process begins as soon as the mains plug for the charger is inserted into the mains socket and the battery is inserted into the charging bay **(1)**.

ⓘ The charging process is only possible when the temperature of the battery is within the permitted charging temperature range (0–45 °C).



For more information, you can access the online operating instructions at www.bosch-pt.com/manuals

Wall mounting

▶ Pull the plug out of the socket before carrying out any work on the charger.

The charger can be used either free-standing (for use on a desktop) or mounted on the wall.

When affixing to the wall: Drill 2 holes, leaving a clearance of **72 mm**. To secure it, use round-head screws with a diameter of 5 mm to max. 6.5 mm.

Troubleshooting

Battery is not being charged

Battery is not being charged and the red temperature monitoring/error indicator (2) is flashing red.
Cause: The charger has identified an internal error.
Corrective measure: Ensure that all batteries are fully inserted. Remove the mains plug and reinsert. If the error occurs again, have the charger checked by an authorised after-sales service centre for **Bosch** power tools.

Indicators do not light up

None of the indicators are lighting up, battery will not be charged.
Cause: Plug socket, mains cable or battery charger defective
Corrective measure: Check the mains voltage. If necessary, have the charger checked by an authorised after-sales service centre.

Maintenance and Service

Maintenance and Cleaning

In order to avoid safety hazards, if the power supply cord needs to be replaced, this must be done by **Bosch** or by an after-sales service centre that is authorised to repair **Bosch** power tools.

After-Sales Service and Application Service

Our after-sales service responds to your questions concerning maintenance and repair of your product as well as spare parts. You can find explosion drawings and information on spare parts at: **www.bosch-pt.com**
The Bosch product use advice team will be happy to help you with any questions about our products and their accessories.
In all correspondence and spare parts orders, please always include the 10-digit article number given on the nameplate of the product.

Great Britain
Robert Bosch Ltd. (B.S.C.)
P.O. Box 98
Broadwater Park
North Orbital Road
Denham Uxbridge
UB 9 5HJ
At www.bosch-pt.co.uk you can order spare parts or arrange the collection of a product in need of servicing or repair.
Tel. Service: (0344) 7360109
E-Mail: boschservicecentre@bosch.com

You can find further service addresses at:

www.bosch-pt.com/serviceaddresses

Disposal

Chargers, accessories and packaging should be recycled in an environmentally friendly manner.



Do not dispose of chargers along with household waste.

Only for EU countries:

According to the European Directive 2012/19/EU on Waste Electrical and Electronic Equipment and its implementation into national law, chargers that are no longer usable must be collected separately and disposed of in an environmentally friendly manner.

If disposed incorrectly, waste electrical and electronic equipment may have harmful effects on the environment and human health, due to the potential presence of hazardous substances.

Only for United Kingdom:

According to The Waste Electrical and Electronic Equipment Regulations 2013 (SI 2013/3113) (as amended), products that are no longer usable must be collected separately and disposed of in an environmentally friendly manner.

UK CA

Français

Consignes de sécurité





Lisez attentivement toutes les instructions et consignes de sécurité. Le non-respect des instructions et consignes de sécurité peut provoquer un choc électrique, un incendie et/ou entraîner de graves blessures.

Garder précieusement ces instructions.

N'utilisez le chargeur qu'après vous être familiarisé avec toutes ses fonctions et que vous êtes capable de l'utiliser sans réserves ou après avoir reçu des instructions correspondantes.

- **Ce chargeur n'est pas prévu pour être utilisé par des enfants ni par des personnes souffrant d'un handicap physique, sensoriel ou mental ou manquant d'expérience ou de connaissances. Ce chargeur peut être utilisé par les enfants (âgés d'au moins 8 ans) et par les personnes souffrant d'un handicap physique, sensoriel ou mental ou manquant d'expérience ou de connaissances, lorsque ceux-ci sont sous la surveillance d'une personne responsable de leur sécurité ou après avoir reçu des instructions sur la façon d'utiliser le chargeur en toute sécurité et après avoir bien compris les dangers inhérents à son utilisation.** Il y a sinon risque de blessures et d'utilisation inappropriée.
- **Ne laissez pas les enfants sans surveillance lors de l'utilisation, du nettoyage et de l'entretien.** Faites en sorte que les enfants ne jouent pas avec le chargeur.
- **N'utilisez le chargeur que pour recharger Boschdes accus Lithium-Ion ou des accus du partenaire AMPShare d'une capacité d'au moins 1,3 Ah. La tension des accus doit être adaptée à la tension de charge du chargeur. Ne rechargez pas de piles non rechargeables.** Il y a sinon risque d'explosion et d'incendie.

N'utilisez le chargeur que dans des lieux fermés et ne l'exposez pas à la pluie ou à de l'humidité. La pénétration d'eau à l'intérieur d'un chargeur accroît le risque de choc électrique.

- **Veillez à ce que le chargeur reste propre.** Un encrassement augmente le risque de choc électrique.
- **Vérifiez l'état du chargeur, du câble et du connecteur avant chaque utilisation. N'utilisez plus le chargeur si vous constatez des dommages. N'ouvrez pas le chargeur vous-même. Ne confiez sa réparation qu'au fabricant Bosch ou à un service après-vente agréé utilisant uniquement des pièces de rechange d'origine.** Lorsque le chargeur, le câble ou le connecteur présente un dommage, le risque de choc électrique augmente.
- **N'utilisez pas le chargeur sur un support facilement inflammable (par ex. papier, textile etc.) ou dans un environnement inflammable.** L'échauffement du chargeur peut provoquer un incendie.
- **Ne recouvrez pas les fentes d'aération du chargeur.** Le chargeur risque sinon de surchauffer et de ne plus fonctionner correctement.
- **Ne recharger qu'avec le chargeur spécifié par le fabricant.** Un chargeur qui est adapté à un type de bloc de batteries peut créer un risque de feu lorsqu'il est utilisé avec un autre type de bloc de batteries.
- **Si l'accu est endommagé ou utilisé de manière non conforme, des vapeurs peuvent s'échapper.** Ventilez le local et consultez un médecin en cas de malaise. Les vapeurs peuvent entraîner des irritations des voies respiratoires.
- **Dans de mauvaises conditions, du liquide peut être éjecté de la batterie; éviter tout contact. En cas de contact accidentel, nettoyer à l'eau. Si le liquide entre en contact avec les yeux, rechercher en plus une aide médicale.** Le liquide éjecté des batteries peut causer des irritations ou des brûlures.

Description des prestations et du produit

Utilisation conforme

Le chargeur est conçu pour charger les accus Lithium-Ion Bosch et ceux des partenaires AMPShare.

Éléments constitutifs

(1) Logement de charge
(2) LED rouge Surveillance de température/Défaut
(3) Indicateur d'état de charge vert