DEWALT®

XR®

DCG409VS
DCG416VS

www.DEWALT.com

Dansk *(oversat fra original brugsvejledning)*	4
Deutsch *(Übersetzung der Originalanweisung)*	23
English ***(original instructions)***	44
Español *(traducido de las instrucciones originales)*	62
Français *(traduction de la notice d'instructions originale)*	82
Italiano *(tradotto dalle istruzioni originali)*	102
Nederlands *(vertaald vanuit de originele instructies)*	122
Norsk *(oversatt fra de originale instruksjonene)*	143
Português *(traduzido das instruções originais)*	161
Suomi *(käännetty alkuperäisestä käyttöohjeesta)*	181
Svenska *(översatt från de ursprungliga instruktionerna)*	199
Türkçe *(orijinal talimatlardan çevrilmiştir)*	217
Ελληνικά *(μετάφραση από τις πρωτότυπες οδηγίες)*	235

Copyright DEWALT

Fig. A

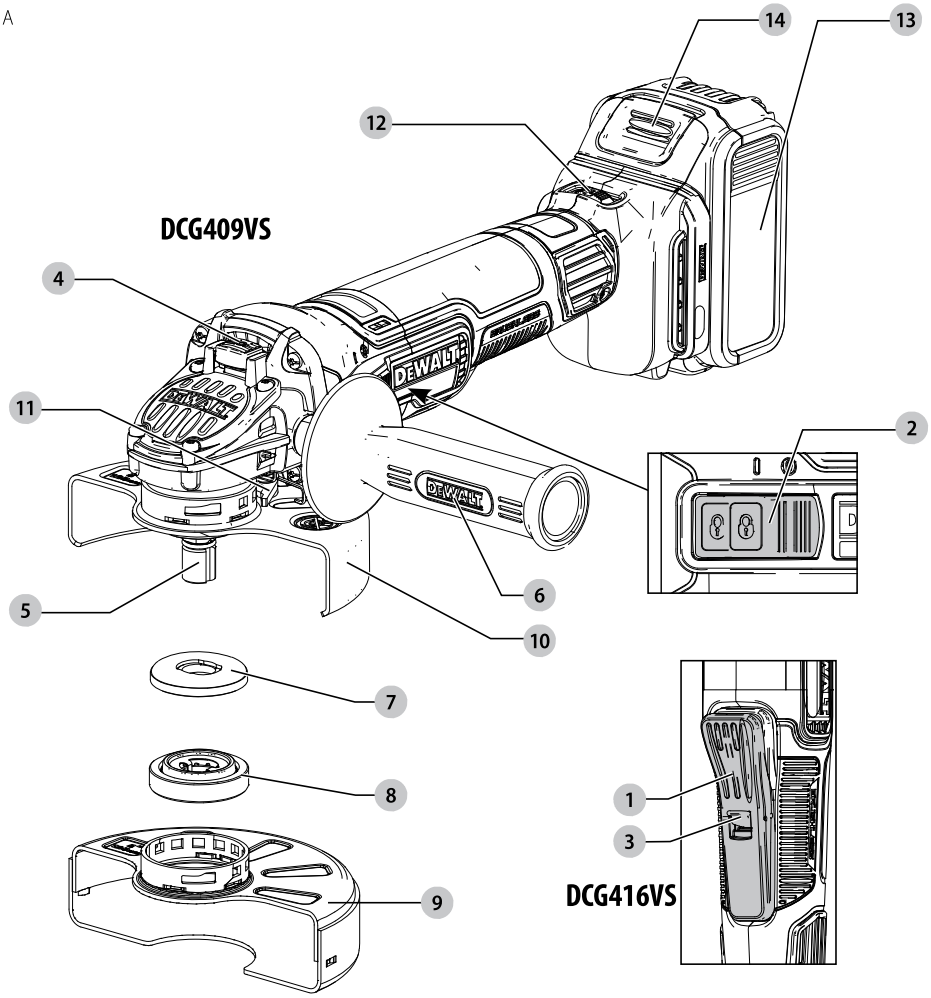

Fig. B

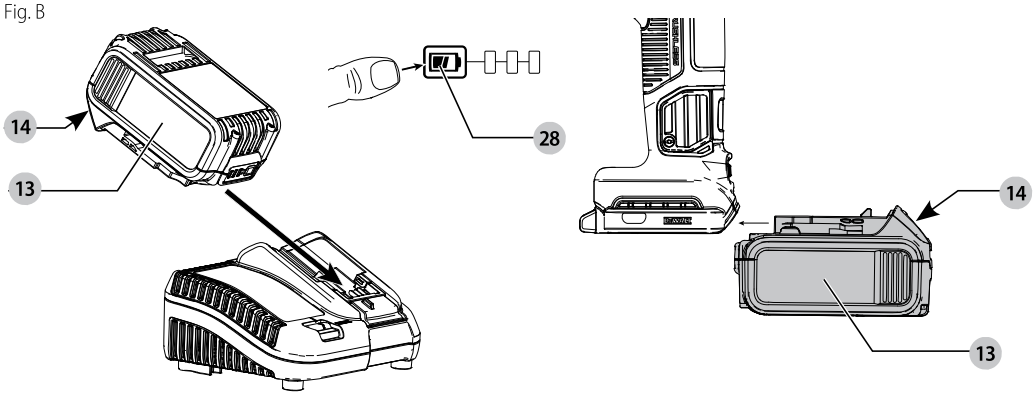

Fig. D

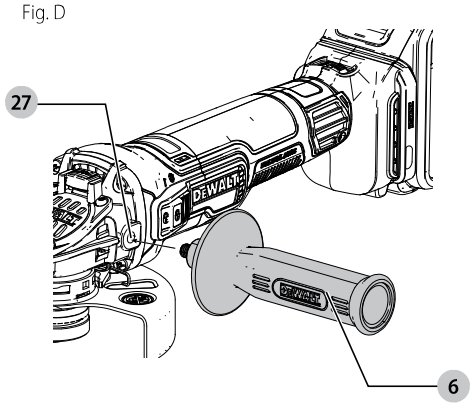

Fig. E

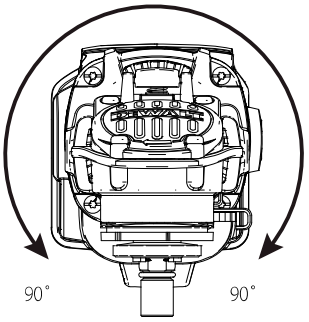

Fig. F

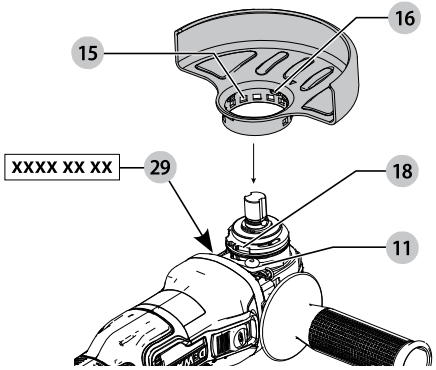

Fig. G

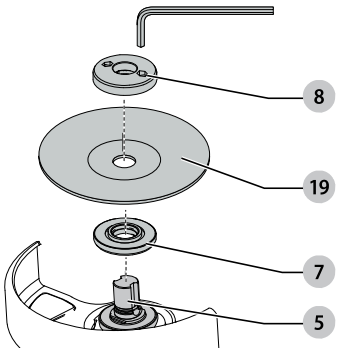

Fig. H

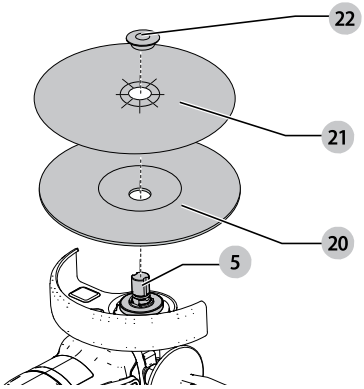

Fig. I

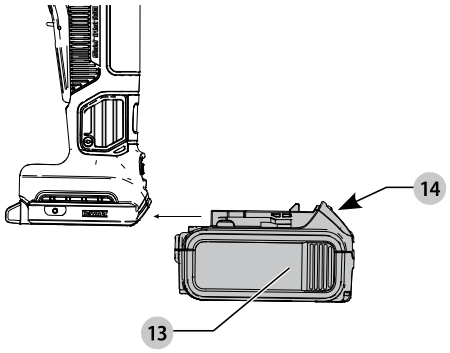

DCG409VS, DCG416VS Anwendungen für Zubehör und Schutzvorrichtungen

	Zubehörtyp	Zubehör	Schutzvorrichtung	Korrekte Montage
Schmirgeln	Scheibe vom Typ 27	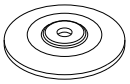	 Typ B (Schleifen)	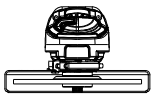 [1]
			[1] Maximale Scheibendicke, 6 mm.	
	Diamantschleifscheibe (Mauerwerk/Beton)		 Type E (Schutzvorrichtung für Diamant-Schleifscheiben)	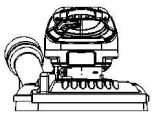 [3]
			[3] Schutzvorrichtung Typ E ist gegen Aufpreis bei Ihrem lokalen DEWALT Händler oder einem autorisiertenDEWALT Servicecenter erhältlich.	
Trennschleifen	Scheibe vom Typ 41 (1A) (Metall)		 Typ A (Geschlossener Ausschnitt)	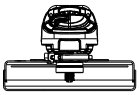
	Scheibe vom Typ 42 (27A) (Metall)	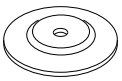	 Typ A oder Typ F (Schutzvorrichtungen für Trennschleifscheiben für geschlossene Ausschnitte oder Mauerwerk/Beton)	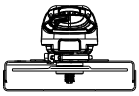
	Scheibe vom Typ 41 (1A) (Mauerwerk/Beton)		 Typ A oder Typ F (Schutzvorrichtungen für Trennschleifscheiben für geschlossene Ausschnitte oder Mauerwerk/Beton)	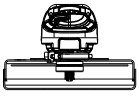
	Diamant-Trennscheibe (Metall)	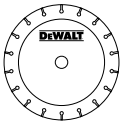	 Typ A (Geschlossener Ausschnitt)	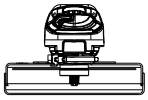 [4]
			[4] Für eine akzeptable Diamantscheibengeometrie siehe die Tabelle ***Zusätzliche Informationen für Schutzvorrichtungen und Zubehör***.	
	Diamant-Trennscheibe (Mauerwerk/Beton)	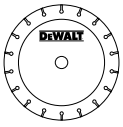	 Typ A (Geschlossener Ausschnitt)	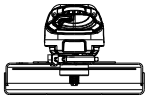 [4]
			[4] Für eine akzeptable Diamantscheibengeometrie siehe die Tabelle ***Zusätzliche Informationen für Schutzvorrichtungen und Zubehör***.	
	Schleifscheiben andere Materialien als Metall oder Mauerwerk/Beton		 Typ A (Geschlossener Ausschnitt)	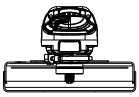

	Zubehörtyp	Zubehör	Schutzvorrichtung	Korrekte Montage
Mehrzweck (kombiniertes Trennschleifen und Schleifen)	Mehrzweck-Schleifscheibe		 Typ A (Geschlossener Ausschnitt)	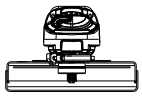 [1]
			[1] Maximale Scheibendicke, 6 mm.	
Drahtbürsten	Drahtbürstscheiben		 Typ A oder Typ B (Geschlossener Ausschnitt oder Schleifen)	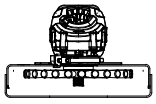 [2, 5]
			[2] Schutzvorrichtung Typ B ist gegen Aufpreis bei Ihrem lokalen DEWALT Händler oder einem autorisierten DEWALT Servicecenter erhältlich. [5] Maximale Drahtrundbürstendicke, 20mm.	
	Topfdrahtbürsten		 Typ B (Schleifen)	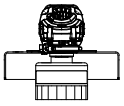 [2]
			[2] Schutzvorrichtung Typ B ist gegen Aufpreis bei Ihrem lokalen DEWALT Händler oder einem autorisierten DEWALT Servicecenter erhältlich.	
Schleifen	Lamellenschleifscheiben (Typ 27 / Typ 29)		 Typ B (Schleifen)	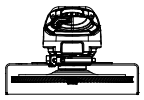 [2]
			[2] Schutzvorrichtung Typ B ist gegen Aufpreis bei Ihrem lokalen DEWALT Händler oder einem autorisierten DEWALT Servicecenter erhältlich.	
	Flexible Schleifmittel (z. B. Schleifpapier) (unterstützt durch einen flexiblen Polierteller)		 Schutzvorrichtung nicht erforderlich	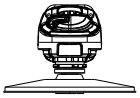 [6]
			[6] Gummipolierteller und Schleifscheibenspannmutter (im Lieferumfang des Gummipoliertellers enthalten) sind gegen Aufpreis bei Ihrem lokalen DEWALT Händler oder einem autorisierten DEWALT Servicezentrum erhältlich.	

Richtlinien für Schutzvorrichtungen und Zubehör für DCG409VS, DCG416VS		
Nicht zugelassene Räder für DCG409VS, DCG416VS	Typ 11 / T11	
Radnabenschlüssel	Radnabenschlüssel sind gegen zusätzliche Kosten bei Ihrem lokalen DEWALT-Händler oder autorisierten DEWALT-Servicecenter erhältlich.	

SMALL ANGLE GRINDER DCG409VS, DCG416VS

Congratulations!

You have chosen a DEWALT tool. Years of experience, thorough product development and innovation make DEWALT one of the most reliable partners for professional power tool users.

Technical Data

		DCG409VS	DCG416VS
Voltage	V_{DC}	18	18
Type		1	1
Battery type		Li-Ion	Li-Ion
Max. Power Output	W	1450	1450
Rated speed	min^{-1}	9000	9000
No load speed	min^{-1}	3000–9000	3000–9000
Wheel diameter⌀	mm	125	125
Wheel thickness (max)	mm	6	6
Wire wheel thickness (max)	mm	16	16
Spindle diameter		M14	M14
Spindle length	mm	21.5	21.5
Wireless Tool Control Transmitter			
Frequency Band	MHz	433	433
Max. Power (EIRP)	mW	0.03	0.03
Weight (without battery pack)	kg	1.85	1.85
Noise values and/or vibration values (triax vector sum) according to EN62841-2-3:			
L_{PA} (emission sound pressure level)	dB(A)	85	86
L_{WA} (sound power level)	dB(A)	93	94
K (uncertainty for the given sound level)	dB(A)	3	3
Surface grinding			
Vibration emission value $a_{h,AG}$ =	m/s^2	6.9	8.3
Uncertainty K =	m/s^2	1.5	1.5
Disc sanding			
Vibration emission value $a_{h,DS}$ =	m/s^2	2.9	<2.5
Uncertainty K =	m/s^2	1.5	1.5
Concrete grinding			
Vibration emission value $a_{h,CG}$ =	m/s^2	6.6	7.3
Uncertainty K =	m/s^2	1.5	1.5
Cutting off			
Vibration emission value $a_{h,CO}$ =	m/s^2	6.6	7.3
Uncertainty K =	m/s^2	1.5	1.5

The vibration and/or noise emission level given in this information sheet has been measured in accordance with a standardised test given in EN62841 and may be used to compare one tool with another. It may be used for a preliminary assessment of exposure.

WARNING: *The declared vibration and/or noise emission level represents the main applications of the tool. However if the tool is used for different applications, with different accessories or poorly maintained, the vibration and/or noise emission may differ. This may significantly increase the exposure level over the total working period.*

An estimation of the level of exposure to vibration and/or noise should also take into account the times when the tool is switched off or when it is running but not actually doing the job. This may significantly reduce the exposure level over the total working period.

Identify additional safety measures to protect the operator from the effects of vibration and/or noise such as: maintain the tool and the accessories, keep the hands warm (relevant for vibration), organisation of work patterns.

WARNING : *Grinding thin sheets of metal or other easily vibrating structures with a large surface can result in a total noise emission much higher (up to 15 dB) than the declared noise emission values. Such workpieces should as far as possible be prevented from emitting sound by suitable measures such as the application of heavy flexible damping mats. The increased noise emission is also to be considered for both the risk assessment of noise exposure and selecting adequate hearing protection.*

EC-Declaration of Conformity

Machinery Directive and Radio Equipment Directive

CE

Cordless Small Angle Grinder DCG409VS, DCG416VS

DEWALT declares that these products described under ***Technical Data*** are in compliance with:
2006/42/EC, EN62841-1:2015, EN62841-2-3:2021 +A11:2021.

These products also comply with Directive 2014/53/EU and 2011/65/EU. For more information, please contact DEWALT at the following address or refer to the back of the manual.

The undersigned is responsible for compilation of the technical file and makes this declaration on behalf of DEWALT.

Markus Rompel
Vice-President Engineering, PTE-Europe
DEWALT, Richard-Klinger-Straße 11,
65510, Idstein, Germany
01.07.2022

Batteries				Chargers/Charge Times (Minutes)***									
Cat #	V_{DC}	Ah	Weight (kg)	DCB104	DCB107	DCB112/	DCB113	DCB115/	DCB116	DCB117	DCB118	DCB132	DCB119
DCB546	18/54	6.0/2.0	1.08	60	270	170	140	90	80	40	60	90	X
DCB547	18/54	9.0/3.0	1.46	75*	420	270	220	135*	110*	60	75*	135*	X
DCB548	18/54	12.0/4.0	1.46	120	540	350	300	180	150	80	120	180	X
DCB549	18/54	15.0/5.0	2.12	125	730	450	380	230	170	90	125	230	X
DCB181	18	1.5	0.35	22	70	45	35	22	22	22	22	22	45
DCB182	18	4.0	0.61	60/40**	185	120	100	60	60/45**	60/40**	60/40**	60	120
DCB183/B/G	18	2.0	0.40	30	90	60	50	30	30	30	30	30	60
DCB184/B/G	18	5.0	0.62	75/50**	240	150	120	75	75/60**	75/50**	75/50**	75	150
DCB185	18	1.3	0.35	22	60	40	30	22	22	22	22	22	40
DCB187	18	3.0	0.54	45	140	90	70	45	45	45	45	45	90
DCB189	18	4.0	0.54	60	185	120	100	60	60	60	60	60	120
DCBP034	18	1.7	0.32	27	82	50	40	27	27	27	27	27	50

**Date code 201811475B or later*

***Date code 201536 or later*

****Battery charge times matrix provided for guidance only; charge times will vary depending on temperature and condition of batteries.*

DECLARATION OF CONFORMITY

MACHINERY AND RADIO EQUIPMENT REGULATIONS

UK CA

Cordless Small Angle Grinder DCG409VS, DCG416VS

DEWALT declares that these products described under "technical data" are in compliance with:

EN62841-1:2015, EN62841-2-3:2021 +A11:2021.

These products conform to the following UK Regulations

The Supply of Machinery (Safety) Regulations, 2008, S.I. 2008/1597 (as amended).

The Radio Equipment Regulations 2017, S.I. 2017/1206 (as amended)

The Restriction of the Use of Certain Hazardous Substances in Electrical and Electronic Equipment Regulations 2012, S.I. 2012/3032 (as amended).

For more information, please contact DEWALT at the following address or refer to the back of the manual.

The undersigned is responsible for compilation of the technical file and makes this declaration on behalf of DEWALT.

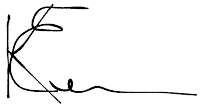

Karl Evans
Vice President Professional Power Tools EANZ GTS
270 Bath Road, Slough
SL1 4DX
England
01.07.2022



WARNING: *To reduce the risk of injury, read the instruction manual.*

Definitions: Safety Guidelines

The definitions below describe the level of severity for each signal word. Please read the manual and pay attention to these symbols.



DANGER: *Indicates an imminently hazardous situation which, if not avoided,* ***will*** *result in* ***death or serious injury****.*



WARNING: *Indicates a potentially hazardous situation which, if not avoided,* ***could*** *result in* ***death or serious injury****.*



CAUTION: *Indicates a potentially hazardous situation which, if not avoided,* ***may*** *result in* ***minor or moderate injury****.*

NOTICE: *Indicates a practice* ***not related to personal injury*** *which, if not avoided,* ***may*** *result in* ***property damage****.*



Denotes risk of electric shock.



Denotes risk of fire.

GENERAL POWER TOOL SAFETY WARNINGS



WARNING: Read all safety warnings, instructions, illustrations and specifications provided with this power tool. *Failure to follow all instructions listed below may result in electric shock, fire and/or serious injury.*

SAVE ALL WARNINGS AND INSTRUCTIONS FOR FUTURE REFERENCE

The term "power tool" in the warnings refers to your mains-operated (corded) power tool or battery-operated (cordless) power tool.

1) Work Area Safety

a) ***Keep work area clean and well lit.*** *Cluttered or dark areas invite accidents.*

b) ***Do not operate power tools in explosive atmospheres, such as in the presence of flammable liquids, gases or dust.*** *Power tools create sparks which may ignite the dust or fumes.*

c) ***Keep children and bystanders away while operating a power tool.*** *Distractions can cause you to lose control.*

2) Electrical Safety

a) ***Power tool plugs must match the outlet. Never modify the plug in any way. Do not use any adapter plugs with earthed (grounded) power tools.*** *Unmodified plugs and matching outlets will reduce risk of electric shock.*

b) ***Avoid body contact with earthed or grounded surfaces, such as pipes, radiators, ranges and refrigerators.*** *There is an increased risk of electric shock if your body is earthed or grounded.*

c) ***Do not expose power tools to rain or wet conditions.*** *Water entering a power tool will increase the risk of electric shock.*

d) ***Do not abuse the cord. Never use the cord for carrying, pulling or unplugging the power tool. Keep cord away from heat, oil, sharp edges or moving parts.*** *Damaged or entangled cords increase the risk of electric shock.*

e) ***When operating a power tool outdoors, use an extension cord suitable for outdoor use.*** *Use of a cord suitable for outdoor use reduces the risk of electric shock.*

f) ***If operating a power tool in a damp location is unavoidable, use a residual current device (RCD) protected supply.*** *Use of an RCD reduces the risk of electric shock.*

3) Personal Safety

a) ***Stay alert, watch what you are doing and use common sense when operating a power tool. Do not use a power tool while you are tired or under the influence of drugs, alcohol or medication.*** *A moment of inattention while operating power tools may result in serious personal injury.*

b) ***Use personal protective equipment. Always wear eye protection.*** *Protective equipment such as a dust mask, non-skid safety shoes, hard hat or hearing protection used for appropriate conditions will reduce personal injuries.*

c) ***Prevent unintentional starting. Ensure the switch is in the off position before connecting to power source and/or battery pack, picking up or carrying the tool.*** *Carrying power tools with your finger on the switch or energising power tools that have the switch on invites accidents.*

d) ***Remove any adjusting key or wrench before turning the power tool on.*** *A wrench or a key left attached to a rotating part of the power tool may result in personal injury.*

e) ***Do not overreach. Keep proper footing and balance at all times.*** *This enables better control of the power tool in unexpected situations.*

f) ***Dress properly. Do not wear loose clothing or jewellery. Keep your hair and clothing away from moving parts.*** *Loose clothes, jewellery or long hair can be caught in moving parts.*

g) ***If devices are provided for the connection of dust extraction and collection facilities, ensure these are connected and properly used.*** *Use of dust collection can reduce dust-related hazards.*

h) ***Do not let familiarity gained from frequent use of tools allow you to become complacent and ignore tool safety principles.*** *A careless action can cause severe injury within a fraction of a second.*

4) Power Tool Use and Care

a) ***Do not force the power tool. Use the correct power tool for your application.*** *The correct power tool will do the job better and safer at the rate for which it was designed.*

b) ***Do not use the power tool if the switch does not turn it on and off.*** *Any power tool that cannot be controlled with the switch is dangerous and must be repaired.*

c) ***Disconnect the plug from the power source and/ or remove the battery pack, if detachable, from the power tool before making any adjustments, changing accessories, or storing power tools.*** *Such preventive safety measures reduce the risk of starting the power tool accidentally.*

d) ***Store idle power tools out of the reach of children and do not allow persons unfamiliar with the power tool or these instructions to operate the power tool.*** *Power tools are dangerous in the hands of untrained users.*

e) ***Maintain power tools and accessories. Check for misalignment or binding of moving parts, breakage of parts and any other condition that may affect the power tool's operation. If damaged, have the power tool repaired before use.*** *Many accidents are caused by poorly maintained power tools.*

f) ***Keep cutting tools sharp and clean.*** *Properly maintained cutting tools with sharp cutting edges are less likely to bind and are easier to control.*

g) ***Use the power tool, accessories and tool bits, etc. in accordance with these instructions, taking into account the working conditions and the work to be performed.*** *Use of the power tool for operations different from those intended could result in a hazardous situation.*

h) ***Keep handles and grasping surfaces dry, clean and free from oil and grease.*** *Slippery handles and grasping surfaces do not allow for safe handling and control of the tool in unexpected situations.*

5) Battery Tool Use and Care

a) ***Recharge only with the charger specified by the manufacturer.*** *A charger that is suitable for one type*

of battery pack may create a risk of fire when used with another battery pack.

b) ***Use power tools only with specifically designated battery packs.*** *Use of any other battery packs may create a risk of injury and fire.*

c) ***When battery pack is not in use, keep it away from other metal objects, like paper clips, coins, keys, nails, screws or other small metal objects, that can make a connection from one terminal to another.*** *Shorting the battery terminals together may cause burns or a fire.*

d) ***Under abusive conditions, liquid may be ejected from the battery; avoid contact. If contact accidentally occurs, flush with water. If liquid contacts eyes, additionally seek medical help.*** *Liquid ejected from the battery may cause irritation or burns.*

e) ***Do not use a battery pack or tool that is damaged or modified.*** *Damaged or modified batteries may exhibit unpredictable behaviour resulting in fire, explosion or risk of injury.*

f) ***Do not expose a battery pack or tool to fire or excessive temperature.*** *Exposure to fire or temperature above 130 °C may cause explosion.*

g) ***Follow all charging instructions and do not charge the battery pack or tool outside the temperature range specified in the instructions.*** *Charging improperly or at temperatures outside the specified range may damage the battery and increase the risk of fire.*

6) Service

a) ***Have your power tool serviced by a qualified repair person using only identical replacement parts.*** *This will ensure that the safety of the power tool is maintained.*

b) ***Never service damaged battery packs.*** *Service of battery packs should only be performed by the manufacturer or authorised service providers.*

ADDITIONAL SPECIFIC SAFETY RULES

Safety Warnings Common for Grinding, Sanding, Wire Brushing, or Cutting-Off Operations

a) ***This power tool is intended to function as a grinder, sander, wire brush, or cut-off tool. Read all safety warnings, instructions, illustrations and specifications provided with this power tool.*** *Failure to follow all instructions listed below may result in electric shock, fire and/or serious injury.*

b) ***Operations such as polishing, or hole cutting are not to be performed with this power tool.*** *Operations for which the power tool was not designed may create a hazard and cause personal injury.*

c) ***Do not convert this power tool to operate in a way which is not specifically designed and specified by the tool manufacturer.*** *Such a conversion may result in a loss of control and cause serious personal injury*

d) ***Do not use accessories which are not specifically designed and specified by the tool manufacturer.*** *Just because the accessory can be attached to your power tool, it does not assure safe operation.*

e) ***The rated speed of the accessory must be at least equal to the maximum speed marked on the power tool.*** *Accessories running faster than their rated speed can break and fly apart.*

f) ***The outside diameter and the thickness of your accessory must be within the capacity rating of your power tool.*** *Incorrectly sized accessories cannot be adequately guarded or controlled.*

g) ***The dimensions of the accessory mounting must fit the dimensions of the mounting hardware of the power tool.*** *Accessories that do not match the mounting hardware of the power tool will run out of balance, vibrate excessively and may cause loss of control.*

h) ***Do not use a damaged accessory. Before each use inspect the accessory such as abrasive wheels for chips and cracks, backing pad for cracks, tear or excess wear, wire brush for loose or cracked wires. If power tool or accessory is dropped, inspect for damage or install an undamaged accessory. After inspecting and installing an accessory, position yourself and bystanders away from the plane of the rotating accessory and run the power tool at maximum no-load speed for one minute.*** *Damaged accessories will normally break apart during this test time.*

i) ***Wear personal protective equipment. Depending on application, use face shield, safety goggles or safety glasses. As appropriate, wear dust mask, hearing protectors, gloves and workshop apron capable of stopping small abrasive or workpiece fragments.*** *The eye protection must be capable of stopping flying debris generated by various operations. The dust mask or respirator must be capable of filtrating particles generated by the particular operation. Prolonged exposure to high intensity noise may cause hearing loss.*

j) ***Keep bystanders a safe distance away from work area. Anyone entering the work area must wear personal protective equipment.*** *Fragments of workpiece or of a broken accessory may fly away and cause injury beyond immediate area of operation.*

k) ***Hold the power tool by insulated gripping surfaces only, when performing an operation where the cutting accessory may contact hidden wiring.*** *Cutting accessory contacting a "live" wire may make exposed metal parts of the power tool "live" and could give the operator an electrical shock.*

l) ***Never lay the power tool down until the accessory has come to a complete stop.*** *The spinning accessory may grab the surface and pull the power tool out of your control.*

m) ***Do not run the power tool while carrying it at your side.*** *Accidental contact with the spinning accessory could snag your clothing, pulling the accessory into your body.*

n) ***Regularly clean the power tool's air vents.*** *The motor's fan will draw the dust inside the housing and*

excessive accumulation of powdered metal may cause electrical hazards.

o) ***Do not operate the power tool near flammable materials.*** *Sparks could ignite these materials.*

p) ***Do not use accessories that require liquid coolants.*** *Using water or other liquid coolants may result in electrocution or shock.*

FURTHER SAFETY INSTRUCTIONS FOR ALL OPERATIONS

Kickback and Related Warnings

Kickback is a sudden reaction to a pinched or snagged rotating wheel, backing pad, brush or any other accessory. Pinching or snagging causes rapid stalling of the rotating accessory which in turn causes the uncontrolled power tool to be forced in the direction opposite of the accessory's rotation at the point of the binding.

For example, if an abrasive wheel is snagged or pinched by the workpiece, the edge of the wheel that is entering into the pinch point can dig into the surface of the material causing the wheel to climb out or kick out. The wheel may either jump toward or away from the operator, depending on direction of the wheel's movement at the point of pinching. Abrasive wheels may also break under these conditions.

Kickback is the result of tool misuse and/or incorrect operating procedures or conditions and can be avoided by taking proper precautions as given below:

a) ***Maintain a firm grip with both hands on the power tool and position your body and arms to allow you to resist kickback forces. Always use auxiliary handle, if provided, for maximum control over kickback or torque reaction during start up.*** *The operator can control torque reaction or kickback forces, if proper precautions are taken.*

b) ***Never place your hand near the rotating accessory.*** *Accessory may kickback over your hand.*

c) ***Do not position your body in the area where power tool will move if kickback occurs.*** *Kickback will propel the tool in direction opposite to the wheel's movement at the point of snagging.*

d) ***Use special care when working corners, sharp edges etc. Avoid bouncing and snagging the accessory.*** *Corners, sharp edges or bouncing have a tendency to snag the rotating accessory and cause loss of control or kickback.*

e) ***Do not attach a saw chain woodcarving blade, segmented diamond wheel with a peripheral gap greater than 10 mm or toothed saw blade.*** *Such blades create frequent kickback and loss of control.*

Safety Warnings Specific for Grinding and Cutting-Off Operations

a) ***Use only wheel types that are specified for your power tool and the specific guard designed for the selected wheel.*** *Wheels for which the power tool was not designed cannot be adequately guarded and are unsafe.*

b) ***The grinding surface of centre depressed wheels must be mounted below the plane of the guard lip.*** *An improperly mounted wheel that projects through the plane of the guard lip cannot be adequately protected.*

c) ***The guard must be securely attached to the power tool and positioned for maximum safety, so the least amount of wheel is exposed towards the operator.*** *The guard helps to protect the operator from broken wheel fragments, accidental contact with wheel and sparks that could ignite clothing.*

d) ***Wheels must be used only for specified applications. For example: do not grind with the side of cut-off wheel.*** *Abrasive cut-off wheels are intended for peripheral grinding, side forces applied to these wheels may cause them to shatter.*

e) ***Always use undamaged wheel flanges that are of correct size and shape for your selected wheel. Proper wheel flanges support the wheel thus reducing the possibility of wheel breakage.*** *Flanges for cut-off wheels may be different from grinding wheel flanges.*

f) ***Do not use worn down wheels from larger power tools.*** *A wheel intended for larger power tool is not suitable for the higher speed of a smaller tool and may burst.*

g) ***When using dual purpose wheels always use the correct guard for the application being performed.*** *Failure to use the correct guard may not provide the desired level of guarding, which could lead to serious injury.*

Additional Safety Warnings Specific for Cutting-Off Operations

a) ***Do not "jam" the cut-off wheel or apply excessive pressure. Do not attempt to make an excessive depth of cut.*** *Overstressing the wheel increases the loading and susceptibility to twisting or binding of the wheel in the cut and the possibility of kickback or wheel breakage.*

b) ***Do not position your body in line with and behind the rotating wheel.*** *When the wheel, at the point of operations, is moving away from your body, the possible kickback may propel the spinning wheel and the power tool directly at you.*

c) ***When wheel is binding or when interrupting a cut for any reason, switch off the power tool and hold it motionless until the wheel comes to a complete stop. Never attempt to remove the cut-off wheel from the cut while the wheel is in motion otherwise kickback may occur.*** *Investigate and take corrective action to eliminate the cause of wheel binding.*

d) ***Do not restart the cutting operation in the workpiece. Let the wheel reach full speed and carefully re-enter the cut.*** *The wheel may bind, walk up or kickback if the power tool is restarted in the workpiece.*

e) ***Support panels or any oversized workpiece to minimize the risk of wheel pinching and kickback. Large workpieces tend to sag under their own weight.*** *Supports must be placed under the workpiece near the line of cut and near the edge of the workpiece on both sides of the wheel.*

f) ***Use extra caution when making a "pocket cut" into existing walls or other blind areas.*** *The protruding wheel may cut gas or water pipes, electrical wiring or objects that can cause kickback.*

g) ***Do not attempt to do curved cutting.*** *Overstressing the wheel increases the loading and susceptibility to twisting or binding of the wheel in the cut and the possibility of kickback or wheel breakage, which can lead to serious injury.*

Additional Safety Instructions for Sanding Operations

a) ***Use proper sized sanding disk paper. Follow manufacturers recommendations, when selecting sanding paper.*** *Larger sanding paper extending too far beyond the sanding pad presents a laceration hazard and may cause snagging, tearing of the disc or kickback.*

Additional Safety Instructions for Wire Brushing Operations

a) ***Be aware that wire bristles are thrown by the brush even during ordinary operation. Do not overstress the wires by applying excessive load to the brush.*** *The wire bristles can easily penetrate light clothing and/or skin.*

b) ***If the use of a guard is specified for wire brushing, do not allow any interference of the wire wheel or brush with the guard.*** *Wire wheel or brush may expand in diameter due to work and centrifugal forces.*

Additional Safety Rules for Grinders

a) ***Do not use Type 11 (flaring cup) wheels on this tool.*** *Using inappropriate accessories can result in injury.*

b) ***Always use side handle. Tighten the handle securely.*** *The side handle should always be used to maintain control of the tool at all times.*

c) ***When using segmented diamond wheels, use only diamond wheels with a peripheral gap not greater than 10 mm and negative rake angle.*** *(refer to* ***Additional Information for Guards and Accessories chart).***

Residual Risks

In spite of the application of the relevant safety regulations and the implementation of safety devices, certain residual risks cannot be avoided. These are:

- *Impairment of hearing.*
- *Risk of personal injury due to flying particles.*
- *Risk of burns due to accessories becoming hot during operation.*
- *Risk of personal injury due to prolonged use.*

SAVE THESE INSTRUCTIONS

Chargers

DEWALT chargers require no adjustment and are designed to be as easy as possible to operate.

Electrical Safety

The electric motor has been designed for one voltage only. Always check that the battery pack voltage corresponds to the voltage on the rating plate. Also make sure that the voltage of your charger corresponds to that of your mains.



Your DEWALT charger is double insulated in accordance with EN60335; therefore, no earth wire is required.

If the supply cord is damaged, it must be replaced only by DEWALT or an authorised service organisation.

Mains Plug Replacement (U.K. & Ireland Only)

If a new mains plug needs to be fitted:

- *Safely dispose of the old plug.*
- *Connect the brown lead to the live terminal in the plug.*
- *Connect the blue lead to the neutral terminal.*



WARNING: *No connection is to be made to the earth terminal.*

Follow the fitting instructions supplied with good quality plugs. Recommended fuse: 3 A.

Using an Extension Cable

An extension cord should not be used unless absolutely necessary. Use an approved extension cable suitable for the power input of your charger (refer to ***Technical Data***). The minimum conductor size is 1 mm^2; the maximum length is 30 m. When using a cable reel, always unwind the cable completely.

Important Safety Instructions for All Battery Chargers

SAVE THESE INSTRUCTIONS: This manual contains important safety and operating instructions for compatible battery chargers (refer to ***Technical Data***). Before using charger, read all instructions and cautionary markings on charger, battery pack, and product using battery pack.



WARNING: *Shock hazard. Do not allow any liquid to get inside charger. Electric shock may result.*



WARNING: *We recommend the use of a residual current device with a residual current rating of 30 mA or less.*



CAUTION: *Burn hazard. To reduce the risk of injury, charge only DEWALT rechargeable batteries. Other types of batteries may burst, causing personal injury and damage.*



CAUTION: *Children should be supervised to ensure that they do not play with the appliance.*

NOTICE: *Under certain conditions, with the charger plugged into the power supply, the exposed charging contacts inside the charger can be shorted by foreign material. Foreign materials of a conductive nature such as, but not limited to, steel wool, aluminum foil or any buildup of metallic particles should be kept away from charger cavities. Always unplug the charger from the power supply*

when there is no battery pack in the cavity. Unplug charger before attempting to clean.

- ***DO NOT attempt to charge the battery pack with any chargers other than the ones in this manual.*** *The charger and battery pack are specifically designed to work together.*
- ***These chargers are not intended for any uses other than charging DEWALT rechargeable batteries.*** *Any other uses may result in risk of fire, electric shock or electrocution.*
- ***Do not expose charger to rain or snow.***
- ***Pull by plug rather than cord when disconnecting charger.*** *This will reduce risk of damage to electric plug and cord.*
- ***Make sure that cord is located so that it will not be stepped on, tripped over, or otherwise subjected to damage or stress.***
- ***Do not use an extension cord unless it is absolutely necessary.*** *Use of improper extension cord could result in risk of fire, electric shock, or electrocution.*
- ***Do not place any object on top of charger or place the charger on a soft surface that might block the ventilation slots and result in excessive internal heat.*** *Place the charger in a position away from any heat source. The charger is ventilated through slots in the top and the bottom of the housing.*
- ***Do not operate charger with damaged cord or plug—*** *have them replaced immediately.*
- ***Do not operate charger if it has received a sharp blow, been dropped, or otherwise damaged in any way.*** *Take it to an authorised service centre.*
- ***Do not disassemble charger; take it to an authorised service centre when service or repair is required.*** *Incorrect reassembly may result in a risk of electric shock, electrocution or fire.*
- *In case of damaged power supply cord, the supply cord must be replaced immediately by the manufacturer, its service agent or similar qualified person to prevent any hazard.*
- ***Disconnect the charger from the outlet before attempting any cleaning. This will reduce the risk of electric shock.*** *Removing the battery pack will not reduce this risk.*
- ***NEVER*** *attempt to connect two chargers together.*
- ***The charger is designed to operate on standard 230V household electrical power. Do not attempt to use it on any other voltage.*** *This does not apply to the vehicular charger.*

Charging a Battery (Fig. B)

1. Plug the charger into an appropriate outlet before inserting battery pack.
2. Insert the battery pack **13** into the charger, making sure the battery pack is fully seated in the charger. The red (charging) light will blink repeatedly, indicating that the charging process has started.
3. The completion of charge will be indicated by the red light remaining ON continuously. The battery pack is fully charged and may be used at this time or left in the charger. To remove the battery pack from the charger, push the battery release button **14** on the battery pack.

NOTE: To ensure maximum performance and life of lithium-ion battery packs, charge the battery pack fully before first use.

Charger Operation

Refer to the indicators below for the charge status of the battery pack.

Charge Indicators	
Charging	— — — —
Fully Charged	———
Hot/Cold Pack Delay*	— — — | ———

*The red light will continue to blink, but a yellow indicator light will be illuminated during this operation. Once the battery pack has reached an appropriate temperature, the yellow light will turn off and the charger will resume the charging procedure.

The compatible charger(s) will not charge a faulty battery pack. The charger will indicate faulty battery by refusing to light.

NOTE: This could also mean a problem with a charger.

If the charger indicates a problem, take the charger and battery pack to be tested at an authorised service centre.

Hot/Cold Pack Delay

When the charger detects a battery pack that is too hot or too cold, it automatically starts a Hot/Cold Pack Delay, suspending charging until the battery pack has reached an appropriate temperature. The charger then automatically switches to the pack charging mode. This feature ensures maximum battery pack life.

A cold battery pack will charge at a slower rate than a warm battery pack. The battery pack will charge at that slower rate throughout the entire charging cycle and will not return to maximum charge rate even if the battery pack warms.

The DCB118 charger is equipped with an internal fan designed to cool the battery pack. The fan will turn on automatically when the battery pack needs to be cooled. Never operate the charger if the fan does not operate properly or if ventilation slots are blocked. Do not permit foreign objects to enter the interior of the charger.

Electronic Protection System

XR Li-Ion tools are designed with an Electronic Protection System that will protect the battery pack against overloading, overheating or deep discharge.

The tool will automatically turn off if the Electronic Protection System engages. If this occurs, place the lithium-ion battery pack in the charger until it is fully charged.

Wall Mounting

These chargers are designed to be wall mountable or to sit upright on a table or work surface. If wall mounting, locate the charger within reach of an electrical outlet, and away from a corner or other obstructions which may impede air flow. Use the back of the charger as a template for the location of the mounting screws on the wall. Mount the charger securely using drywall screws (purchased separately) at least 25.4 mm long with a screw head diameter of 7–9 mm, screwed into wood to an optimal depth leaving approximately 5.5 mm of the screw exposed. Align the slots on the back of the charger with the exposed screws and fully engage them in the slots.

Charger Cleaning Instructions

WARNING: Shock hazard. Disconnect the charger from the AC outlet before cleaning. *Dirt and grease may be removed from the exterior of the charger using a cloth or soft non-metallic brush. Do not use water or any cleaning solutions. Never let any liquid get inside the tool; never immerse any part of the tool into a liquid.*

Battery Packs

Important Safety Instructions for All Battery Packs

When ordering replacement battery packs, be sure to include catalogue number and voltage.

The battery pack is not fully charged out of the carton. Before using the battery pack and charger, read the safety instructions below. Then follow charging procedures outlined.

READ ALL INSTRUCTIONS

- ***Do not charge or use battery in explosive atmospheres, such as in the presence of flammable liquids, gases or dust.*** *Inserting or removing the battery from the charger may ignite the dust or fumes.*
- ***Never force battery pack into charger. Do not modify battery pack in any way to fit into a non-compatible charger as battery pack may rupture, causing serious personal injury.***
- *Charge the battery packs only in DEWALT chargers.*
- ***DO NOT*** *splash or immerse in water or other liquids.*
- ***Do not store or use the tool and battery pack in locations where the temperature may fall below 4 ˚C (39.2 ˚F) (such as outside sheds or metal buildings in winter), or reach or exceed 40 ˚C (104 ˚F) (such as outside sheds or metal buildings in summer).***
- ***Do not incinerate the battery pack even if it is severely damaged or is completely worn out.*** *The battery pack can explode in a fire. Toxic fumes and materials are created when lithium-ion battery packs are burned.*
- ***If battery contents come into contact with the skin, immediately wash area with mild soap and water.*** *If battery liquid gets into the eye, rinse water over the open eye for 15 minutes or until irritation ceases. If medical attention is needed, the battery electrolyte is composed of a mixture of liquid organic carbonates and lithium salts.*
- ***Contents of opened battery cells may cause respiratory irritation.*** *Provide fresh air. If symptoms persist, seek medical attention.*

WARNING: *Burn hazard. Battery liquid may be flammable if exposed to spark or flame.*

WARNING: *Never attempt to open the battery pack for any reason. If battery pack case is cracked or damaged, do not insert into charger. Do not crush, drop or damage battery pack. Do not use a battery pack or charger that has received a sharp blow, been dropped, run over or damaged in any way (i.e., pierced with a nail, hit with a hammer, stepped on). Electric shock or electrocution may result. Damaged battery packs should be returned to service centre for recycling.*

WARNING: Fire hazard. Do not store or carry the battery pack so that metal objects can contact exposed battery terminals. *For example, do not place the battery pack in aprons, pockets, tool boxes, product kit boxes, drawers, etc., with loose nails, screws, keys, etc.*

CAUTION: When not in use, place tool on its side on a stable surface where it will not cause a tripping or falling hazard. *Some tools with large battery packs will stand upright on the battery pack but may be easily knocked over.*

Transportation

WARNING: Fire hazard. *Transporting batteries can possibly cause fire if the battery terminals inadvertently come into contact with conductive materials. When transporting batteries, make sure that the battery terminals are protected and well-insulated from materials that could contact them and cause a short circuit.* ***NOTE:*** *Lithium-ion batteries should not be put in checked baggage.*

DEWALT batteries comply with all applicable shipping regulations as prescribed by industry and legal standards, which include UN Recommendations on the Transport of Dangerous Goods; International Air Transport Association (IATA) Dangerous Goods Regulations; International Maritime Dangerous Goods (IMDG) Regulations; and the European Agreement Concerning The International Carriage of Dangerous Goods by Road (ADR). Lithium-ion cells and batteries have been tested to section 38.3 of the UN Recommendations on the Transport of Dangerous Goods Manual of Tests and Criteria.

In most instances, shipping a DEWALT battery pack will be excepted from being classified as a fully regulated Class 9 Hazardous Material. In general, only shipments containing a lithium-ion battery with an energy rating greater than 100 Watt Hours (Wh) will require being shipped as fully regulated Class 9. All lithium-ion batteries have the Wh rating marked on the pack. Furthermore, due to regulation complexities, DEWALT does not recommend air shipping lithium-ion battery packs alone regardless of Wh rating. Shipments of tools with batteries (combo kits) can be air shipped as excepted if the Wh rating of the battery pack is no greater than 100 Wh.

Regardless of whether a shipment is considered excepted or fully regulated, it is the shipper's responsibility to consult the latest regulations for packaging, labeling/marking and documentation requirements.

The information provided in this section of the manual is provided in good faith and believed to be accurate at the time the document was created. However, no warranty, expressed or implied, is given. It is the buyer's responsibility to ensure that its activities comply with the applicable regulations.

Transporting the FLEXVOLT™ Battery

The DEWALT FLEXVOLT® battery has two modes: **Use** and **Transport**.

Use Mode: When the FLEXVOLT™ battery stands alone or is in a DEWALT 18V product, it will operate as an 18V battery. When

the FLEXVOLT™ battery is in a 54V or a 108V (two 54V batteries) product, it will operate as a 54V battery.

Transport Mode: When the cap is attached to the FLEXVOLT™ battery, the battery is in Transport mode. Keep the cap for shipping.

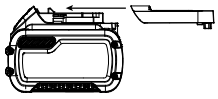

When in Transport mode, strings of cells are electrically disconnected within the pack, resulting in 3 batteries with a lower Watt hour (Wh) rating as compared to 1 battery with a higher Watt hour rating. This increased quantity of 3 batteries with the lower Watt hour rating can exempt the pack from certain shipping regulations that are imposed upon the higher Watt hour batteries.

For example, the Transport Wh rating might indicate 3 x 36 Wh, meaning 3 batteries of 36 Wh each. The Use Wh rating might indicate 108 Wh (1 battery implied).

Example of Use and Transport Label Marking



Storage Recommendations

1. The best storage place is one that is cool and dry away from direct sunlight and excessive heat or cold. For optimum battery performance and life, store battery packs at room temperature when not in use.
2. For long storage, it is recommended to store a fully charged battery pack in a cool, dry place out of the charger for optimal results.

NOTE: Battery packs should not be stored completely depleted of charge. The battery pack will need to be recharged before use.

Labels on Charger and Battery Pack

In addition to the pictographs used in this manual, the labels on the charger and the battery pack may show the following pictographs:



Read instruction manual before use.


Refer to ***Technical Data*** for charging time.


Do not probe with conductive objects.


Do not charge damaged battery packs.


Do not expose to water.


Have defective cords replaced immediately.



Charge only between 4 °C and 40 °C.


Only for indoor use.



Discard the battery pack with due care for the environment.



Charge DEWALT battery packs only with designated DEWALT chargers. Charging battery packs other than the designated DEWALT batteries with a DEWALT charger may make them burst or lead to other dangerous situations.


Do not incinerate the battery pack.


USE (without transport cap). Example: Wh rating indicates 108 Wh (1 battery with 108 Wh).


TRANSPORT (with built-in transport cap). Example: Wh rating indicates 3 x 36 Wh (3 batteries of 36 Wh).

Battery Type

These battery packs may be used: DCB181, DCB182, DCB183, DCB183B, DCB183G, DCB184, DCB184B, DCB184G, DCB185, DCB187, DCB189, DCBP034, DCBP034G, DCBP518, DCBP518G, DCB546, DCB547, DCB547G, DCB548, DCB549. Refer to ***Technical Data*** for more information.

Package Contents

The package contains:

1 Angle grinder
1 125 mm Guard (Type B)
1 125 mm Guard (Type A)
1 Side handle
1 Hex wrench
2 Li-Ion battery pack (T2, X2 models)
1 Li-Ion battery pack (C1, D1, L1, M1, P1, S1, T1, X1, Y1 models)
2 Li-Ion battery packs (C2, D2, L2, M2, P2, S2, T2, X2, Y2 models)
3 Li-Ion battery packs (C3, D3, L3, M3, P3, S3, T3, X3, Y3 models)
1 Instruction manual

NOTE: Battery packs, chargers and kitboxes are not included with N models. Battery packs and chargers are not included with NT models. B models include Bluetooth® battery packs.

NOTE: The Bluetooth® word mark and logos are registered trademarks owned by the Bluetooth®, SIG, Inc. and any use of such marks by DEWALT is under license. Other trademarks and trade names are those of their respective owners.

- *Check for damage to the tool, parts or accessories which may have occurred during transport.*
- *Take the time to thoroughly read and understand this manual prior to operation.*

Markings on Tool

The following pictograms are shown on the tool:


Read instruction manual before use.


Wear ear protection.


Wear eye protection.


Always operate with two hands.


Do not use the guard for cut-off operations.

Date Code Position (Fig. F)

The production date code **29** consists of a 4-digit year followed by a 2-digit week and is extended by a 2-digit factory code.

Description (Fig. A)

WARNING: *Never modify the power tool or any part of it. Damage or personal injury could result.*

1 Paddle switch
2 Slide switch
3 Lock-off lever
4 Spindle lock button
5 Spindle
6 Side handle
7 Backing flange
8 Locking flange
9 Type A guard 125 mm
10 Type B guard 125 mm (do not use for cut-off operations)
11 Guard release lever
12 Variable speed dial
13 Battery pack
14 Battery release button

Intended Use

The DCG409VS and DCG416VS cordless angle grinder have been designed for professional cutting, grinding, sanding and wire brush applications.

DO NOT use under wet conditions or in the presence of flammable liquids or gases.

This cordless angle grinder is a professional power tool.

DO NOT let children come into contact with the tool. Supervision is required when inexperienced operators use this tool.

- **Young children and the infirm.** This appliance is not intended for use by young children or infirm persons without supervision.
- This product is not intended for use by persons (including children) suffering from diminished physical, sensory or mental abilities; lack of experience, knowledge or skills unless they are supervised by a person responsible for their safety. Children should never be left alone with this product.

ASSEMBLY AND ADJUSTMENTS

WARNING: To reduce the risk of serious personal injury, turn tool off and disconnect battery pack before making any adjustments or removing/ installing attachments or accessories. *An accidental start-up can cause injury.*

WARNING: *Use only DEWALT batteries and chargers.*

Features

E-Clutch™

This unit is equipped with an E-Clutch™ (Electronic Clutch), which in the event of a high-load event, the unit will be shut off to reduce the reaction torque to the user. The switch needs to be cycled (turned on and off) to restart tool.

Kickback Brake™

When a pinch, stall, or bind-up event is sensed, the electronic brake engages with maximum force to quickly stop the wheel, reduce the movement of the grinder, and shut the grinder off. The switch needs to be cycled (turned on and off) to restart the tool.

Power-Off™ Overload Protection

The power supply to the motor will be reduced in case of motor overload. With continued motor overload, the tool will shut off. The switch needs to be cycled (turned on and off) to restart tool. The tool will power off each time the current load reaches the overload current value (motor burn-up point). If continued overload shutdowns occur, apply less force/weight on the tool until the tool will function without the overload engaging.

Electronic Soft Start

This feature limits the initial start-up speed, allowing the tool to build up to full speed gradually over a 1 second period.

Inserting and Removing the Battery Pack from the Tool (Fig. B)

NOTE: Make sure your battery pack **13** is fully charged.

To Install the Battery Pack into the Tool Handle

1. Align the battery pack with the rails inside the tool's handle (Fig. B).
2. Slide it into the handle until the battery pack is firmly seated in the tool and ensure that you hear the lock snap into place.

To Remove the Battery Pack from the Tool

1. Press the battery release button **14** and firmly pull the battery pack out of the tool handle.
2. Insert battery pack into the charger as described in the charger section of this manual.

Fuel Gauge Battery Packs (Fig. B)

Some DEWALT battery packs include a fuel gauge, which consists of three green LED lights that indicate the level of charge remaining in the battery pack.

To actuate the fuel gauge, press and hold the fuel gauge button **28**. A combination of the three green LED lights will illuminate, designating the level of charge left. When the level of charge in the battery is below the usable limit, the fuel gauge will not illuminate and the battery will need to be recharged.

NOTE: The fuel gauge is only an indication of the charge left on the battery pack. It does not indicate tool functionality and is subject to variation based on product components, temperature and end-user application.

Attaching the Auxiliary Handle (Fig. D)

WARNING: This handle SHOULD BE USED AT ALL TIMES to maintain complete control of the tool. *Always make sure the handle is tight.*

Screw the auxiliary handle (6) tightly into one of the threaded mounting holes (27) of the gear case.

Rotating the Gear Case (Fig. E)

To improve user comfort, the gear case will rotate 90 ° for cutting operations.

1. Remove the four corner screws (T25) attaching the gear case to motor housing.
2. Without separating the gear case from motor housing, rotate the gear case head to desired position.
   NOTE: If the gear case and motor housing become separated by more than 3 mm, the tool must be serviced and reassembled by a DEWALT service centre. Failure to have the tool serviced may lead to motor and bearing failure.
3. Reinstall screws to attach the gear case to the motor housing. Tighten screws to 3.1 Nm torque. Overtightening could cause screws to strip.

Guards

CAUTION: Guards must be used with all grinding wheels, cutting wheels, sanding flap discs, wire brushes, and wire wheels. *The tool may be used without a guard only when sanding with conventional sanding discs. Refer to Figure A to see guards provided with the unit. Some applications may require purchasing the correct guard from your local dealer or authorised service centre.*

CAUTION: *When using a Type A (cut-off)* ***wheel guard*** *for facial grinding, the* ***wheel guard*** *may interfere with the workpiece causing poor control.*

CAUTION: *When using a Type B (grinding)* ***wheel guard*** *for cutting-off operations with bonded abrasive wheels, there is an increased risk of exposure to emitted sparks and particles, as well as exposure to wheel fragments in the event of wheel burst.*

CAUTION: *When using a Type A (cut-off), Type B (grinding)* ***wheel guard*** *for cutting-off and facial operations in concrete or masonry, there is an increased risk of exposure to dust and loss of control resulting in kickback.*

NOTE: Edge grinding and cutting can be performed with Type 27 wheels designed and specified for this purpose; 6 mm thick wheels are designed for surface grinding while thinner Type 27 wheels need to be examined for the manufacturer's label to see if they can be used for surface grinding or only edge grinding/ cutting. A Type A (cut-off) **wheel guard** must be used for any wheel where surface grinding is forbidden. A Type A (cut-off) (previously called type 1/41) **wheel guard** must be used for for any dual purpose (combined grinding and cutting-off abrasive) wheels. Cutting can also be performed by using a Type 1/41 wheel and a Type A cut-off **wheel guard** previously called Type 1/41 guard.

NOTE: See the ***Accessory and Guard Applications Chart*** to select the proper guard / accessory combination.

Mounting and Adjusting the One-Touch™ Guard (Fig. E)

WARNING: To reduce the risk of serious personal injury, turn tool off and disconnect battery pack before making any adjustments or removing/ installing attachments or accessories. *An accidental start-up can cause injury.*

Adjusting the Guard

For guard adjustment, the guard release lever (11) engages one of the alignment holes (15) on the guard collar using a ratcheting feature.

The engaging face is slanted and will ride over to the next alignment hole when guard is rotated in a clockwise direction (spindle facing user) but self-locks in the anti-clockwise direction.

Mounting the Guard (Fig. E)

1. Press the guard release lever (11).
2. While holding the guard release lever open, align the lugs (16) on the guard with the slots (18) on the gear case.
3. Keeping the guard release lever open, push the guard down until the guard lugs engage and rotate them in the groove on the gear case hub. Release the guard release lever.
4. With the spindle facing the operator, rotate the guard clockwise into the desired working position. Press and hold the guard release lever (11) to rotate the guard in the anti-clockwise direction.
   NOTE: The guard body should be positioned between the spindle and the operator to provide maximum operator protection.
   The guard release lever should snap into one of the alignment holes (15) on the guard collar. This ensures that the guard is secure.
5. To remove the guard, follow steps 1–3 of these instructions in reverse.

Flanges and Wheels

WARNING: To reduce the risk of serious personal injury, turn unit off and remove the battery pack before making any adjustments or removing/ installing attachments or accessories. *An accidental can cause injury.*

Mounting Non-Hubbed Wheels (Fig. G)

WARNING: *Failure to properly seat the flanges and/or wheel could result in serious injury (or damage to the tool or wheel).*

CAUTION: *Included flanges must be used with depressed centre Type 27/42 grinding wheels and Type 1/41 cutting wheels. Refer to the* ***Accessory and Guard Applications Chart*** *for more information.*

WARNING: *A closed, two-sided cutting wheel guard is required when using abrasive cutting wheels or diamond coated cutting wheels, referred to as a Type A cut-off wheel guard.*

WARNING: *Use of a damaged flange or guard or failure to use proper flange and guard can result in injury due to wheel breakage and wheel contact. Refer to the* ***Accessory and Guard Applications Chart*** *for more information.*

1. Place the tool on a table, guard up.
2. Place wheel 19 against the backing flange 7, centreing the wheel on the raised centre (pilot) of the backing flange.
3. While depressing the spindle lock button and with the hex depressions facing away from the wheel, thread the threaded locking flange 8 on spindle so that the lugs engage the two slots in the spindle.
4. While depressing the spindle lock button, tighten the threaded locking flange 8 using a hex wrench.
5. To remove the wheel, depress the spindle lock button and loosen the threaded locking flange.

Mounting Sanding Backing Pads (Fig. A, H)

NOTE: Use of a guard with sanding discs that use backing pads, often called fiber resin discs, is not required. Since a guard is not required for these accessories, the guard may or may not fit correctly if used.

WARNING: *Failure to properly seat the clamp nut and/or pad could result in serious injury (or damage to the tool or wheel).*

WARNING: *Proper guard must be reinstalled for grinding wheel, cutting wheel, sanding flap disc, wire brush or wire wheel applications after sanding applications are complete.*

1. Place or appropriately thread backing pad 20 on the spindle.
2. Place the sanding disc 21 on the backing pad 20.
3. While depressing spindle lock button 4, thread the sanding clamp nut 22 on spindle, piloting the raised hub on the clamp nut into the centre of sanding disc and backing pad.
4. Tighten the clamp nut by hand. Then depress the spindle lock button while turning the sanding disc until the sanding disc and clamp nut are snug.
5. To remove the wheel, grasp and turn the backing pad and sanding pad while depressing the spindle lock button.

Mounting and Removing Hubbed Wheels (Fig. A)

Hubbed wheels install directly on the spindle. Thread of accessory must match thread of spindle.

1. Thread the wheel on the spindle 5 by hand.
2. Depress the spindle lock button 4 and use a wrench to tighten the hub of the wheel.
3. Reverse the above procedure to remove the wheel.

NOTICE: *Failure to properly seat the wheel before turning the tool on may result in damage to the tool or the wheel.*

Mounting Wire Cup Brushes and Wire Wheels (Fig. A)

WARNING: *Failure to properly seat the brush/wheel could result in serious injury (or damage to the tool or wheel).*

CAUTION: To reduce the risk of personal injury, wear work gloves when handling wire brushes and wheels. *They can become sharp.*

CAUTION: To reduce the risk of damage to the tool, wheel or brush must not touch guard when mounted or while in use. *When using a Type A (cut-off), or Type B (grinding) wheel guard with a wheel-type wire brush with a thickness greater than the maximum thickness as specified in the* ***Accessory and Guard Applications Chart****, the wires may catch on the guard leading to breaking of the wires.*

Wire cup brushes or wire wheels install directly on the threaded spindle without the use of locking flange. Use only wire brushes or wheels provided with a M14 threaded hub. These accessories are available at extra cost from your local DEWALT dealer or authorised DEWALT service centre.

1. Place the tool on a table, guard up.
2. Thread the wheel on the spindle 5 by hand.
3. Depress spindle lock button 4 and use a wrench on the hub of the wire wheel or brush to tighten the wheel.
4. To remove the wheel, reverse the above procedure.

NOTICE: *To reduce the risk of damage to the tool, properly seat the wheel hub before turning the tool on.*

Prior to Operation

- Install the guard and appropriate disc or wheel. Do not use excessively worn discs or wheels.
- Be sure the threaded locking flange are mounted correctly. Follow the instructions given in the ***Accessory and Guard Application Chart***.
- Make sure the disc or wheel rotates in the direction of the arrows on the accessory and the tool.
- Do not use a damaged accessory. Before each use inspect the accessory such as abrasive wheels for chips and cracks, backing pad for cracks, tear or excess wear, wire brush for loose or cracked wires. If power tool or accessory is dropped, inspect for damage or install an undamaged accessory. After inspecting and installing an accessory, position yourself and bystanders away from the plane of the rotating accessory and run the power tool at maximum no-load speed for one minute. Damaged accessories will normally break apart during this test time.

OPERATION

Instructions for Use

WARNING: *Always observe the safety instructions and applicable regulations.*

WARNING: To reduce the risk of serious personal injury, turn tool off and disconnect battery pack before making any adjustments or removing/installing attachments or accessories. *An accidental start-up can cause injury.*

Proper Hand Position (Fig. K)

WARNING: *To reduce the risk of serious personal injury,* ***ALWAYS*** *use proper hand position as shown.*

WARNING: *To reduce the risk of serious personal injury,* ***ALWAYS*** *hold securely in anticipation of a sudden reaction.*

Proper hand position requires one hand on the main handle **26** and the other hand on the auxiliary handle **6**, as shown in Fig. K.

Wireless Tool Control (Fig. A)

CAUTION: *Read all saftey warnings, instruction and specifications of the appliance which is paired with the tool.*

Your tool is equipped with a Wireless Tool Control transmitter which allows your tool to be wirelessly paired with another Wireless Tool Control device, such as a dust extractor.

To pair your tool using Wireless Tool Control, press and hold the paddle switch **1** /slide switch **2** on the tool and the Wireless Tool Control pairing button on the seperate device. An LED on the seperate device will let you know when your tool has been successfully paired.

Switches

CAUTION: *Hold the auxiliary handle and body of the tool firmly to maintain control of the tool at start up and during use and until the wheel or accessory stops rotating. Make sure the wheel has come to a complete stop before laying the tool down.*

NOTE: To reduce unexpected tool movement, do not switch the tool on or off while under load conditions. Allow the grinder to run up to full speed before touching the work surface. Lift the tool from the surface before turning the tool off. Allow the tool to stop rotating before putting it down.

Slider Switch (Fig. A) DCG409VS

WARNING: *Before connecting the tool to a power supply, be sure the slider switch is in the off position. Ensure the slider switch is in the off position after any interruption in power supply to the tool, such as the activation of a ground fault interrupter, throwing of a circuit breaker, accidental unplugging, or power failure. If the slider switch is locked on when the power is connected, the tool will start unexpectedly.*

To start the tool, slide the ON/OFF slider switch **2** toward the front of the tool. To stop the tool, release the ON/OFF slider switch.

For continuous operation, slide the switch toward the front of the tool and press the forward part of the switch inward. To stop the tool while operating in continuous mode, press the rear part of the slider switch and release.

Paddle Switch (Fig. A) DCG416VS

1. To turn the tool on, push the lock-off lever **3** toward the back of the tool, then depress the paddle switch **1**. The tool will run while the switch is depressed.
2. Turn the tool off by releasing the paddle switch.

Variable Speed Dial (Fig. A)

The variable speed dial **12** offers added tool control and enables the tool to be used at optimum conditions to suit the accessory and material.

- Turn the variable speed dial **12** to the desired level. Turn the dial upward for higher speed and downward for lower speed.

Spindle Lock (Fig. A)

The spindle lock button **4** is provided to prevent the spindle from rotating when installing or removing wheels. Operate the spindle lock only when the tool is turned off, the battery is removed and the spindle has come to a complete stop.

NOTICE: *To reduce the risk of damage to the tool, do not engage the spindle lock while the tool is operating. Damage to the tool will result and attached accessory may spin off, possibly resulting in injury.*

To engage the lock, depress the spindle lock button and rotate the spindle until you are unable to rotate the spindle further.

Surface Grinding, Sanding and Wire Brushing (Fig. L)

CAUTION: Always use the correct guard per the instructions in this manual.

To perform work on the surface of a workpiece:

1. Allow the tool to reach full speed before touching the tool to the work surface.
2. Apply minimum pressure to the work surface, allowing the tool to operate at high speed. Material removal rate is greatest when the tool operates at high speed.
3. Maintain an appropriate angle between the tool and work surface. Refer to the chart according to particular function.

Function	Angle ∠
Grinding	20°-30°
Sanding with Flap Disc	5°-10°
Sanding with Backing Pad	5°-15°
Wire Brushing	5°-10°

4. Maintain contact between the edge of the wheel and the work surface.
   - If grinding, sanding with flap discs, or wire brushing, move the tool continuously in a forward and back motion to avoid creating gouges in the work surface.
   - If sanding with a backing pad, move the tool constantly in a straight line to prevent burning and swirling of work surface.

NOTE: Allowing the tool to rest on the work surface without moving will damage the workpiece.

5. Remove the tool from work surface before turning tool off. Allow the tool to stop rotating before laying it down.

CAUTION: *Use extra care when working over an edge, as a sudden sharp movement of grinder may be experienced.*

Precautions To Take When Working on a Painted Workpiece

1. Sanding or wire brushing of lead-based paint is NOT RECOMMENDED due to the difficulty of controlling the contaminated dust. The greatest danger of lead poisoning is to children and pregnant women.
2. Since it is difficult to identify whether or not a paint contains lead without a chemical analysis, we recommend the following precautions when sanding any paint:

Personal Safety

1. No children or pregnant women should enter the work area where the paint sanding or wire brushing is being done until all clean-up is completed.
2. A dust mask or respirator should be worn by all persons entering the work area. The filter should be replaced daily or whenever the wearer has difficulty breathing.
   NOTE: Only those dust masks suitable for working with lead paint dust and fumes should be used. Ordinary painting masks do not offer this protection. Refer to your local hardware dealer for the proper approved mask.
3. NO EATING, DRINKING or SMOKING should be done in the work area to prevent ingesting contaminated paint particles. Workers should wash and clean up BEFORE eating, drinking or smoking. Articles of food, drink, or smoking should not be left in the work area where dust would settle on them.

Environmental Safety

1. Paint should be removed in such a manner as to minimise the amount of dust generated.
2. Areas where paint removal is occurring should be sealed with plastic sheeting of 4 mils thickness.
3. Sanding should be done in a manner to reduce tracking of paint dust outside the work area.

Cleaning and Disposal

1. All surfaces in the work area should be vacuumed and thoroughly cleaned daily for the duration of the sanding project. Vacuum filter bags should be changed frequently.
2. Plastic drop cloths should be gathered up and disposed of along with any dust chips or other removal debris. They should be placed in sealed refuse receptacles and disposed of through regular trash pick-up procedures.
   During clean-up, children and pregnant women should be kept away from the immediate work area.
3. All toys, washable furniture and utensils used by children should be washed thoroughly before being used again.

Edge Grinding and Cutting (Fig. M)

WARNING: *Do not use edge grinding/cutting wheels for surface grinding applications because these wheels are not designed for side pressures encountered with surface grinding. Wheel breakage and injury may result.*

CAUTION: *Wheels used for edge grinding and cutting may break or kick back if they bend or twist while the tool is being used. In all edge grinding/cutting operations, the open side of the guard must be positioned away from the operator.*

NOTICE: *Edge grinding/cutting with a Type 27 wheel must be limited to shallow cutting and notching—less than 13 mm in depth when the wheel is new. Reduce the depth of cutting/notching equal to the reduction of the wheel radius as it wears down. Refer to the* **Accessory and Guard Application Chart** *for more information. Edge grinding/cutting with a Type 41 wheel requires usage of a Type A guard.*

1. Allow the tool to reach full speed before touching the tool to the work surface.
2. Apply minimum pressure to the work surface, allowing the tool to operate at high speed. Grinding/cutting rate is greatest when the tool operates at high speed.
3. Position yourself so that the open-underside of the wheel is facing away from you.
4. Once a cut is begun and a notch is established in the workpiece, do not change the angle of the cut. Changing the angle will cause the wheel to bend and may cause wheel breakage. Edge grinding wheels are not designed to withstand side pressures caused by bending.
5. Remove the tool from the work surface before turning the tool off. Allow the tool to stop rotating before laying it down.

Cutting Metal

For cutting with bonded abrasives, always use the Type A guard.

When cutting, work with moderate feed, adapted to the material being cut. Do not exert pressure onto the cutting disc, tilt or oscillate the machine.

Do not reduce the speed of running down cutting discs by applying sideward pressure.

The machine must always work in an upgrinding motion. Otherwise, the danger exists of it being pushed uncontrolled out of the cut.

When cutting profiles and square bar, it is best to start at the smallest cross section.

MAINTENANCE

Your power tool has been designed to operate over a long period of time with a minimum of maintenance. Continuous satisfactory operation depends upon proper tool care and regular cleaning.

WARNING: To reduce the risk of serious personal injury, turn tool off and disconnect battery pack before making any adjustments or removing/ installing attachments or accessories. *An accidental start-up can cause injury.*

The charger and battery pack are not serviceable.

Lubrication

Your power tool requires no additional lubrication.

Cleaning

WARNING: *Electrical shock and mechanical hazard. Disconnect the electrical appliance from the power source before cleaning.*

WARNING: *To ensure safe and efficient operation, always keep the electrical appliance and the ventilation slots clean.*

WARNING: *Never use solvents or other harsh chemicals for cleaning the non-metallic parts of the tool. These chemicals may weaken the materials used in these parts. Use a cloth dampened only with water and mild soap. Never let any liquid get inside the tool; never immerse any part of the tool into a liquid.*

Ventilation slots can be cleaned using a dry, soft non-metallic brush and/or a suitable vacuum cleaner. Do not use water or any cleaning solutions. Wear approved eye protection and an approved dust mask.

Optional Accessories

WARNING: *Since accessories, other than those offered by DEWALT, have not been tested with this product, use of such accessories with this tool could be hazardous. To reduce the risk of injury, only DEWALT recommended accessories should be used with this product.*

WARNING: *Do not use a bonded abrasive wheel that is past its expiration (EXP) date as marked near center of wheel (if provided). Expired wheels are more likely to burst and cause serious injury. Store bonded abrasive wheels in dry location without temperature or humidity extremes. Destroy expired or damaged wheels so they cannot be used.*

Consult your dealer for further information on the appropriate accessories.

The capacity of this tool is 125 mm diameter x 6 mm (max.) thickness grinding or cutting wheels. It is important to choose the correct guards, backing pads and flanges to use with grinder accessories. See the ***Accessory and Guard Applications Chart*** for information on choosing the correct accessories.

WARNING: *Accessories must be rated for at least the speed recommended on the tool warning label. Wheels and other accessories running over their rated accessory speed may fly apart and cause injury. Threaded accessories must have a M14 hub. Every unthreaded accessory must have a 22 mm arbor hole. If it does not, it may have been designed for a circular saw. Use only the accessories shown in the* **Accessory and Guard Applications Chart** *of this manual. Accessory ratings must always be above tool speed as shown on tool nameplate.*

WARNING: *Handle and store all abrasive wheels carefully to prevent damage from thermal shock, heat, mechanical damage, etc. Store in a dry protected area free from high humidity, freezing temperatures or extreme temperature changes.*

	Max. [mm]		[mm]	Min. Rotation [min.$^{-1}$]	Periphical speed [m/s]	Threaded hole length [mm]
	D	b	d			
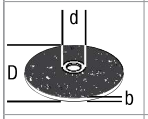	125	6	22.23	10500	80	–
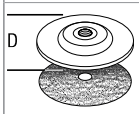	125	–	–	10500	80	–
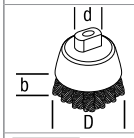	75	30	M14	10500	45	20.0
	125	16	M14	10500	80	20.0

Tool Connect™ Chip (Fig. N)

WARNING: To reduce the risk of serious personal injury, turn unit off and remove the battery pack before making any adjustments or removing/ installing attachments or accessories. *An accidental start-up can cause injury.*

Your tool is Tool Connect™ Chip ready and has a location for installation of a Tool Connect™ Chip.

Tool Connect™ Chip is an optional application for your smart device (such as a smart phone or tablet) that connects the device to utilise the mobile application for inventory management functions.

Refer to ***Tool Connect™ Chip Instruction Sheet*** for more information.

Installing the Tool Connect™ Chip

1. Remove the retaining screws **21** that hold the Tool Connect™ Chip protective cover **24** into the tool.
2. Remove the protective cover and insert the Tool Connect™ Chip into the empty pocket **25**.
3. Ensure that the Tool Connect™ Chip is flush with the housing. Secure it with the retaining screws and tighten the screws.
4. Refer to ***Tool Connect™ Chip Instruction Sheet*** for further instructions.

Protecting the Environment

Separate collection. Products and batteries marked with this symbol must not be disposed of with normal household waste.

Products and batteries contain materials that can be recovered or recycled, reducing the demand for raw materials. Please recycle electrical products and batteries according to local provisions. Further information is available at **www.2helpU.com**.

Rechargeable Battery Pack

This long-life battery pack must be recharged when it fails to produce sufficient power on jobs that were easily done before. At the end of its technical life, discard it with due care for our environment:

- Run the battery pack down completely, then remove it from the tool.
- Li-Ion cells are recyclable. Take them to your dealer or a local recycling station. The collected battery packs will be recycled or disposed of properly.

Guard Types for DCG409VS, DCG416VS		
Type B (Shallow, Grinding)	**Type A (Closed cut off)**	**Type E (Diamond surface grinding wheel guard))**
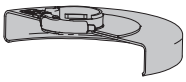		

Type A (Type 41) guards are intended for use with Type 41 (1A) cutting wheels and Type 42 (27A) wheels marked for cutting only. Grinding with wheels other than Type 27 and Type 29 require different accessory guards. Always use the smallest proper guard possible that does not contact the accessory.

NOTE: Type A (cut-off) and Type B (grinding) wheel guards where previously referred to as Type 1/41 and Type 27 wheel guards.

Additional Information for Guards and Accessories for DCG409VS, DCG416VS	
When using segmented diamond wheels, use only diamond wheels with a peripheral gap not greater than 10 mm and negative rake angle.	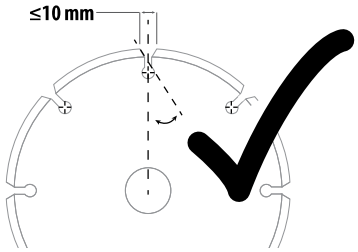
DO NOT USE **segmented diamond wheels with a peripheral gap greater than 10 mm and/or a a positive rake angle.**	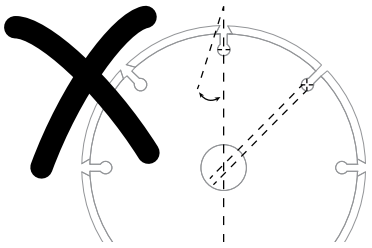
For all grinding, sanding, and wheel type wire brushing accessories, the lowest portion of the accessory must be contained within the guard enclosure with 2mm or greater clearance to the bottom lip of guard.	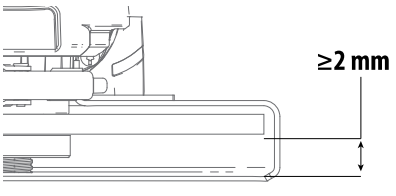

DCG409VS, DCG416VS Accessory and Guard Applications

	Accessory Type	Accessory	Guard	Correct Assembly
Surface Grinding	Wheel Type 27	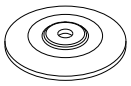	 Type B (Grinding)	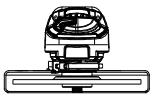 [1]
			[1] Maximum wheel thickness, 6 mm.	
	Diamond Grinding Wheel (masonry/concrete)		 Type E (Diamond surface grinding wheel guard))	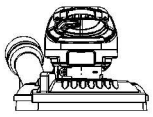 [3]
			[3] Type E guard available at additional cost from your local DEWALT dealer or authorised DEWALT service centre.	
Cutting Off	Wheel Type 41 (1A) (metal)		 Type A (Closed cut off)	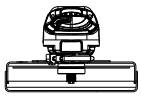
	Wheel Type 42 (27A) (metal)	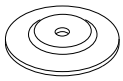	 Type A or Type F (Closed cut off or masonry/concrete cut off wheel guard)	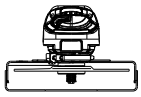
	Wheel Type 41 (1A) (masonry/concrete)		 Type A or Type F (Closed cut off or masonry/concrete cut off wheel guard)	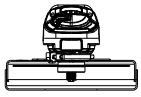
	Diamond Cutting Wheel (metal)	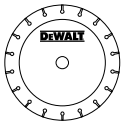	 Type A (Closed cut off)	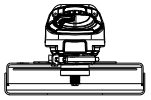 [4]
			[4] For acceptable diamond wheel geomtry reference ***Additional Information for Guards and Accessories*** chart.	
	Diamond Cutting Wheel (masonry/concrete)	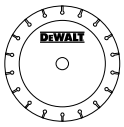	 Type A (Closed cut off)	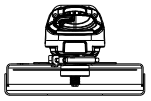 [4]
			[4] For acceptable diamond wheel geomtry reference ***Additional Information for Guards and Accessories*** chart.	
	Abrasive Wheels For Materials Other Than Metal Or Masonry/Concrete		 Type A (Closed cut off)	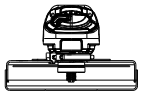

	Accessory Type	Accessory	Guard	Correct Assembly
Dual Purpose (combined cut-off and grinding)	Dual Purpose Abrasive Wheel		 Type A (Closed cut off)	[1] 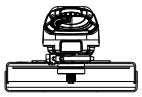
			[1] Maximum wheel thickness, 6 mm.	
Wire Brushing	Wheel-Type Wire Brush		 Type A or Type B (Closed cut off or Grinding)	[2, 5] 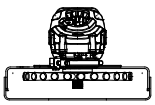
			[2] Type B guard available at additional cost from your local DEWALT dealer or authorised DEWALT service centre. [5] Maximum wire wheel thickness, 20mm.	
	Cup Type Wire Brush		 Type B (Grinding)	[2] 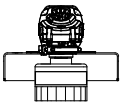
			[2] Type B guard available at additional cost from your local DEWALT dealer or authorised DEWALT service centre.	
	Flap Disc (Type 27 / Type 29)		 Type B (Grinding)	[2] 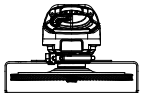
			[2] Type B guard available at additional cost from your local DEWALT dealer or authorised DEWALT service centre.	
	Flexible Abrasive (e.g. sandpaper) (supported by a flexible backing pad)		 Guard not required	[6] 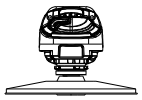
			[6] Rubber backing pad and sanding clamp nut (included with rubber backing pad) available at additional cost from your local DEWALT dealer or authorised DEWALT service centre.	

Guidelines for Guards and Accessories for DCG409VS, DCG416VS		
Non-approved Wheels for DCG409VS, DCG416VS	Type 11 / T11	
Hubbed Wheel Wrench	Hubbed wheel wrench available at additional cost from your local DEWALT dealer or authorised DEWALT service centre.	