DEWALT®

XR®

DCD800
DCD805

www.DEWALT.com

Dansk *(oversat fra original brugsvejledning)*	3
Deutsch *(Übersetzung der Originalanweisung)*	14
English ***(original instructions)***	27
Español *(traducido de las instrucciones originales)*	38
Français *(traduction de la notice d'instructions originale)*	50
Italiano *(tradotto dalle istruzioni originali)*	62
Nederlands *(vertaald vanuit de originele instructies)*	74
Norsk *(oversatt fra de originale instruksjonene)*	86
Português *(traduzido das instruções originais)*	97
Suomi *(käännetty alkuperäisestä käyttöohjeesta)*	109
Svenska *(översatt från de ursprungliga instruktionerna)*	120
Türkçe *(orijinal talimatlardan çevrilmiştir)*	131
Ελληνικά *(μετάφραση από τις πρωτότυπες οδηγίες)*	142

Copyright DEWALT

Fig. A

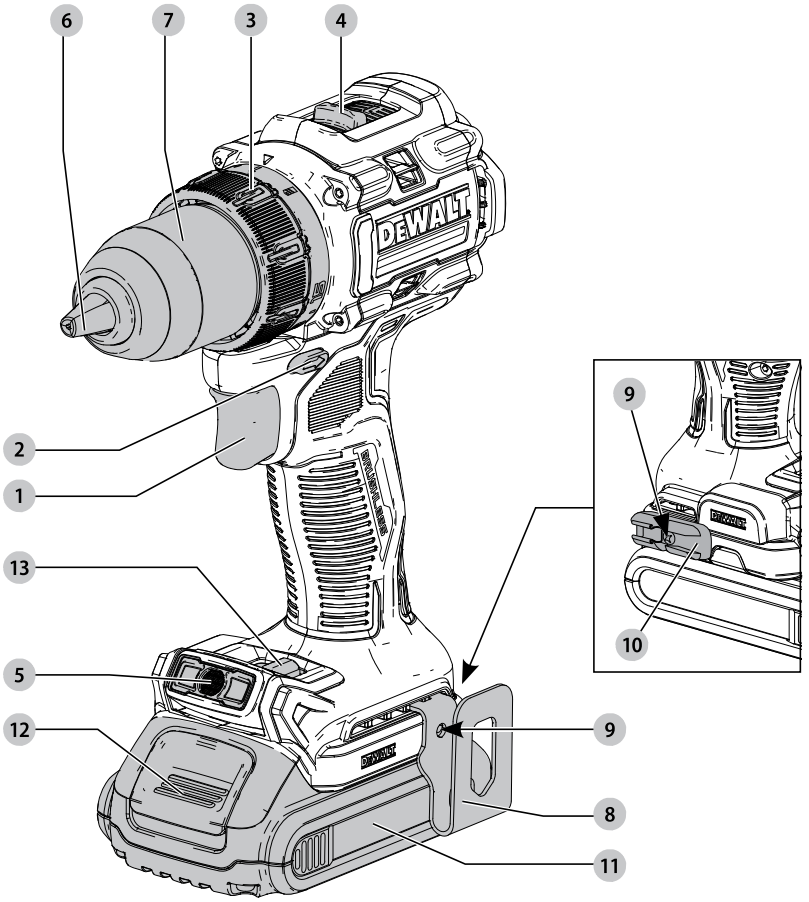

Fig. B

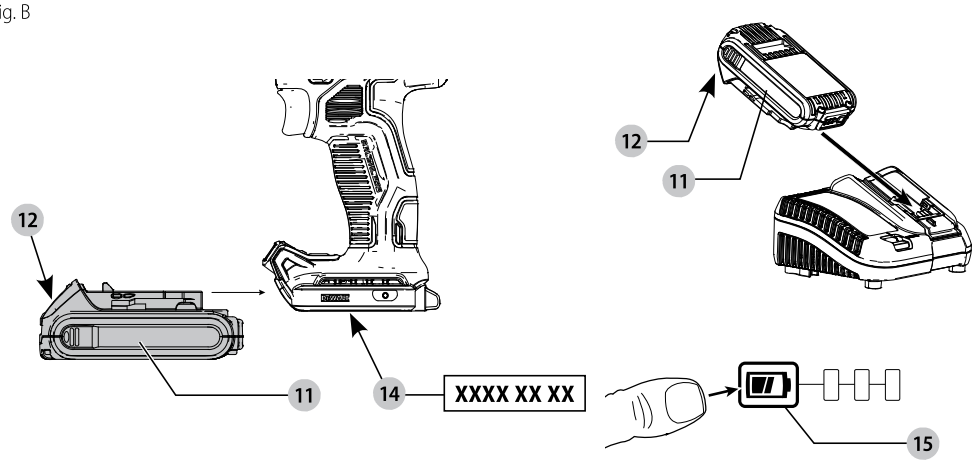

Fig. C

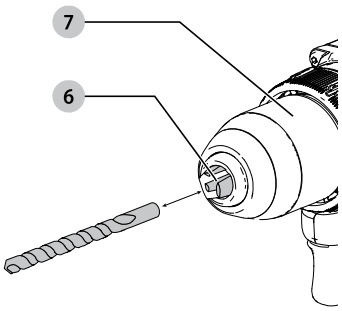

Fig. D

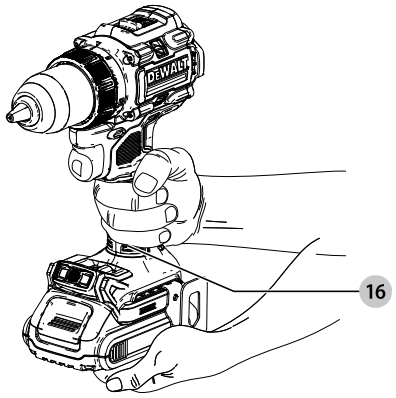

Fig. E

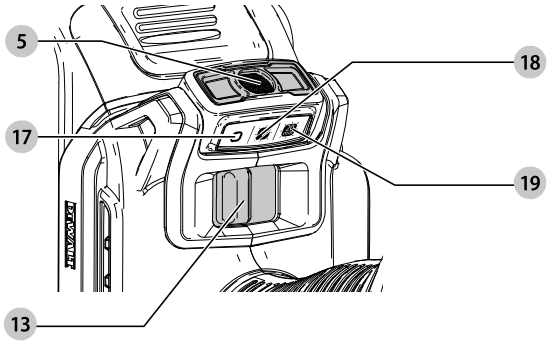

BOR
DCD800
BOR/SLAGBOREMASKINE
DCD805

Tillykke!

Du har valgt et DEWALT-værktøj. Mange års erfaring, ihærdig produktudvikling og innovation gør DEWALT én af de mest pålidelige partnere for professionelle brugere af elværktøj.

Tekniske Data

		DCD800	DCD805
Spænding	V_{DC}	18	18
Type		1	1
Batteritype		Li-Ion	Li-Ion
Hastighed ved ingen belastning			
1. gear	min^{-1}	0–650	0–650
2. gear	min^{-1}	0–2000	0–2000
Slaghastighed			
1. gear	min^{-1}	—	0–11050
2. gear	min^{-1}	—	0–34000
Maks. drejemoment (hård/blød)	Nm	90/27	90/27
Patronkapacitet	mm	1,5–13,0	1,5–13,0
Maksimum borekapacitet			
Træ	mm	55	55
Metal	mm	13	13
Murværk	mm	—	13
Vægt (uden batteripakke)	kg	1,28	1,34

Støjværdier og/eller vibrationsværdier (triax vector sum) i henhold til EN62841-2-1:			
L_{PA} (emissionslydtrykniveau)	dB(A)	74	90
L_{WA} (lydeffektniveau)	dB(A)	85	101
K (usikkerhed for det angivne lydniveau)	dB(A)	5	5
Boring i metal			
Vibrationsemissionsværdi $a_{h,D}$ =	m/s^2	2,5	2,5
Usikkerhed K =	m/s^2	1,5	1,5
Boring i beton			
Vibrationsemissionsværdi $a_{h,ID}$ =	m/s^2	—	11
Usikkerhed K =	m/s^2	—	1,5

Vibrations- og/eller støjemissionsniveauet, der er angivet i dette vejledningsark, er målt i overensstemmelse med en standardiseret test, der er angivet i EN62841 og kan anvendes til at sammenligne et værktøj med et andet. Det kan anvendes til en foreløbig eksponeringsvurdering.

ADVARSEL: *Det angivne vibrations- og/eller støjemissionsniveau repræsenterer værktøjets hovedanvendelsesområder. Hvis værktøjet anvendes til andre formål, med andet tilbehør eller vedligeholdes dårligt, kan vibrations- og/eller støjemissionen imidlertid variere. Det kan markant forøge eksponeringsniveauet over den samlede arbejdsperiode.*

Et estimat af eksponeringsniveauet for vibration og/eller støj bør også tage højde for de gange, hvor der slukkes for værktøjet, eller når det kører, men ikke bruges til arbejde. Det kan markant mindske eksponeringsniveauet over den samlede arbejdsperiode.

Identificer yderligere sikkerhedsforanstaltninger for at beskytte operatøren mod virkningerne af vibrationer og/eller støj, såsom: Vedligehold værktøjet og tilbehør, hold hænderne varme (relevante for vibrationer), organisering af arbejdsmønstre.

EF-overensstemmelseserklæring

Maskindirektiv

CE

Bor/Slagboremaskine
DCD800, DCD805

DEWALT erklærer, at produkterne beskrevet under ***Tekniske data*** er i overensstemmelse med:
2006/42/EF, EN62841-1:2015, EN62841-2-1:2018+A11:2019.

Disse produkter opfylder også Direktiv 2014/30/EU og 2011/65/EU. Kontakt DEWALT på nedenstående adresse, eller se vejledningens bagside for at få flere oplysninger.

Undertegnede er ansvarlig for udarbejdelsen af den tekniske fil og fremsætter denne erklæring på vegne af DEWALT.



Markus Rompel
Vicedirektør for teknik, PTE-Europe
DEWALT, Richard-Klinger-Straße 11,
65510, Idstein, Tyskland
30.10.2021

ADVARSEL: *Læs instruktionsvejledningen for at reducere risikoen for personskader.*

Definitioner: sikkerhedsretningslinjer

Nedenstående definitioner beskriver sikkerhedsniveauet for hvert enkelt signalord. Læs vejledningen og vær opmærksom på disse symboler.

DRILL
DCD800
DRILL/HAMMERDRILL
DCD805

Congratulations!

You have chosen a DEWALT tool. Years of experience, thorough product development and innovation make DEWALT one of the most reliable partners for professional power tool users.

Technical Data

		DCD800	DCD805
Voltage	V_{DC}	18	18
Type		1	1
Battery type		Li-Ion	Li-Ion
No-load speed			
1st gear	min^{-1}	0–650	0–650
2nd gear	min^{-1}	0–2000	0–2000
Impact rate			
1st gear	min^{-1}	—	0–11050
2nd gear	min^{-1}	—	0–34000
Max. torque (hard/soft)	Nm	90/27	90/27
Chuck capacity	mm	1.5–13.0	1.5–13.0
Maximum drilling capacity			
Wood	mm	55	55
Metal	mm	13	13
Masonry	mm	—	13
Weight (without battery pack)	kg	1.28	1.34

Noise values and/or vibration values (triax vector sum) according to EN62841-2-1:			
L_{PA} (emission sound pressure level)	dB(A)	74	90
L_{WA} (sound power level)	dB(A)	85	101
K (uncertainty for the given sound level)	dB(A)	5	5
Drilling into metal			
Vibration emission value $a_{h,D}$ =	m/s^2	< 2.5	< 2.5
Uncertainty K =	m/s^2	1.5	1.5
Drilling into concrete			
Vibration emission value $a_{h,ID}$ =	m/s^2	—	11
Uncertainty K =	m/s^2	—	1.5

The vibration and/or noise emission level given in this information sheet has been measured in accordance with a standardised test given in EN62841 and may be used to compare one tool with another. It may be used for a preliminary assessment of exposure.

WARNING: *The declared vibration and/or noise emission level represents the main applications of the tool. However if the tool is used for different applications, with different accessories or poorly maintained, the vibration and/or noise emission may differ. This may significantly increase the exposure level over the total working period.*

An estimation of the level of exposure to vibration and/or noise should also take into account the times when the tool is switched off or when it is running but not actually doing the job. This may significantly reduce the exposure level over the total working period.

Identify additional safety measures to protect the operator from the effects of vibration and/or noise such as: maintain the tool and the accessories, keep the hands warm (relevant for vibration), organisation of work patterns.

EC-Declaration of Conformity

Machinery Directive

CE

Drill/Impact Drill
DCD800, DCD805

DEWALT declares that these products described under ***Technical Data*** are in compliance with:
2006/42/EC, EN62841-1:2015, EN62841-2-1:2018+A11:2019.

These products also comply with Directive 2014/30/EU and 2011/65/EU. For more information, please contact DEWALT at the following address or refer to the back of the manual.

The undersigned is responsible for compilation of the technical file and makes this declaration on behalf of DEWALT.

Markus Rompel
Vice-President Engineering, PTE-Europe
DEWALT, Richard-Klinger-Straße 11,
65510, Idstein, Germany
30.10.2021

Batteries				Chargers/Charge Times (Minutes)***									
Cat #	V_{DC}	Ah	Weight (kg)	DCB104	DCB107	DCB112/ DCB1102	DCB113	DCB115/ DCB1104	DCB116	DCB117	DCB118	DCB132	DCB119
DCB546	18/54	6.0/2.0	1.08	60	270	170	140	90	80	40	60	90	X
DCB547	18/54	9.0/3.0	1.46	75*	420	270	220	135*	110*	60	75*	135*	X
DCB549	18/54	15.0/5.0	2.12	125	730	450	380	230	170	90	125	230	X
DCB181	18	1.5	0.35	22	70	45	35	22	22	22	22	22	45
DCB182	18	4.0	0.61	60/40**	185	120	100	60	60/45**	60/40**	60/40**	60	120
DCB183/B/G	18	2.0	0.40	30	90	60	50	30	30	30	30	30	60
DCB184/B/G	18	5.0	0.62	75/50**	240	150	120	75	75/60**	75/50**	75/50**	75	150
DCB185	18	1.3	0.35	22	60	40	30	22	22	22	22	22	40
DCB187	18	3.0	0.54	45	140	90	70	45	45	45	45	45	90
DCB189	18	4.0	0.54	60	185	120	100	60	60	60	60	60	120
DCBP034	18	1.7	0.32	27	82	50	40	27	27	27	27	27	50
DCBP518	18	5.0	0.75	75	240	150	120	75	75	75	75	75	150

**Date code 201811475B or later*
***Date code 201536 or later*
****Battery charge times matrix provided for guidance only; charge times will vary depending on temperature and condition of batteries.*

DECLARATION OF CONFORMITY THE SUPPLY OF MACHINERY (SAFETY) REGULATIONS 2008

UK CA

DRILL/IMPACT DRILL
DCD800, DCD805

DEWALT declares that these products described under ***Technical Data*** are in compliance with:

The Supply of Machinery (Safety) Regulations, 2008, S.I. 2008/1597 (as amended),

EN62841-1:2015, EN62841-2-1:2018+A11:2019.

These products conform to the following UK Regulations:

Electromagnetic Compatibility Regulations, 2016, S.I.2016/1091 (as amended).

The Restriction of the Use of Certain Hazardous Substances in Electrical and Electronic Equipment Regulations 2012, S.I. 2012/3032 (as amended).

For more information, please contact DEWALT at the following address or refer to the back of the manual.

The undersigned is responsible for compilation of the technical file and makes this declaration on behalf of DEWALT.

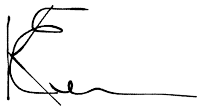

Karl Evans
Vice President Professional Power Tools EANZ GTS
DEWALT UK, 270 Bath Road, Slough
SL1 4DX
England
30.10.2021



WARNING: *To reduce the risk of injury, read the instruction manual.*

Definitions: Safety Guidelines

The definitions below describe the level of severity for each signal word. Please read the manual and pay attention to these symbols.



DANGER: *Indicates an imminently hazardous situation which, if not avoided,* ***will*** *result in* ***death or serious injury****.*



WARNING: *Indicates a potentially hazardous situation which, if not avoided,* ***could*** *result in* ***death or serious injury****.*



CAUTION: *Indicates a potentially hazardous situation which, if not avoided,* ***may*** *result in* ***minor or moderate injury****.*

NOTICE: *Indicates a practice* ***not related to personal injury*** *which, if not avoided,* ***may*** *result in* ***property damage****.*



Denotes risk of electric shock.



Denotes risk of fire.

GENERAL POWER TOOL SAFETY WARNINGS



WARNING: Read all safety warnings, instructions, illustrations and specifications provided with this power tool. *Failure to follow all instructions listed below may result in electric shock, fire and/or serious injury.*

SAVE ALL WARNINGS AND INSTRUCTIONS FOR FUTURE REFERENCE

The term "power tool" in the warnings refers to your mains-operated (corded) power tool or battery-operated (cordless) power tool.

1) Work Area Safety

a) ***Keep work area clean and well lit.*** *Cluttered or dark areas invite accidents.*

b) ***Do not operate power tools in explosive atmospheres, such as in the presence of flammable liquids, gases or dust.*** *Power tools create sparks which may ignite the dust or fumes.*

c) ***Keep children and bystanders away while operating a power tool.*** *Distractions can cause you to lose control.*

2) Electrical Safety

a) ***Power tool plugs must match the outlet. Never modify the plug in any way. Do not use any adapter plugs with earthed (grounded) power tools.*** *Unmodified plugs and matching outlets will reduce risk of electric shock.*

b) ***Avoid body contact with earthed or grounded surfaces, such as pipes, radiators, ranges and refrigerators.*** *There is an increased risk of electric shock if your body is earthed or grounded.*

c) ***Do not expose power tools to rain or wet conditions.*** *Water entering a power tool will increase the risk of electric shock.*

d) ***Do not abuse the cord. Never use the cord for carrying, pulling or unplugging the power tool. Keep cord away from heat, oil, sharp edges or moving parts.*** *Damaged or entangled cords increase the risk of electric shock.*

e) ***When operating a power tool outdoors, use an extension cord suitable for outdoor use.*** *Use of a cord suitable for outdoor use reduces the risk of electric shock.*

f) ***If operating a power tool in a damp location is unavoidable, use a residual current device (RCD) protected supply.*** *Use of an RCD reduces the risk of electric shock.*

3) Personal Safety

a) ***Stay alert, watch what you are doing and use common sense when operating a power tool. Do not use a power tool while you are tired or under the influence of drugs, alcohol or medication.*** *A moment of inattention while operating power tools may result in serious personal injury.*

b) ***Use personal protective equipment. Always wear eye protection.*** *Protective equipment such as a dust mask, non-skid safety shoes, hard hat or hearing protection used for appropriate conditions will reduce personal injuries.*

c) ***Prevent unintentional starting. Ensure the switch is in the off-position before connecting to power source and/or battery pack, picking up or carrying the tool.*** *Carrying power tools with your finger on the switch or energising power tools that have the switch on invites accidents.*

d) ***Remove any adjusting key or wrench before turning the power tool on.*** *A wrench or a key left attached to a rotating part of the power tool may result in personal injury.*

e) ***Do not overreach. Keep proper footing and balance at all times.*** *This enables better control of the power tool in unexpected situations.*

f) ***Dress properly. Do not wear loose clothing or jewellery. Keep your hair and clothing away from moving parts.*** *Loose clothes, jewellery or long hair can be caught in moving parts.*

g) ***If devices are provided for the connection of dust extraction and collection facilities, ensure these are connected and properly used.*** *Use of dust collection can reduce dust-related hazards.*

h) ***Do not let familiarity gained from frequent use of tools allow you to become complacent and ignore tool safety principles.*** *A careless action can cause severe injury within a fraction of a second.*

4) Power Tool Use and Care

a) ***Do not force the power tool. Use the correct power tool for your application.*** *The correct power tool will do the job better and safer at the rate for which it was designed.*

b) ***Do not use the power tool if the switch does not turn it on and off.*** *Any power tool that cannot be controlled with the switch is dangerous and must be repaired.*

c) ***Disconnect the plug from the power source and/or remove the battery pack, if detachable, from the power tool before making any adjustments, changing accessories, or storing power tools.*** *Such preventive safety measures reduce the risk of starting the power tool accidentally.*

d) ***Store idle power tools out of the reach of children and do not allow persons unfamiliar with the power tool or these instructions to operate the power tool.*** *Power tools are dangerous in the hands of untrained users.*

e) ***Maintain power tools and accessories. Check for misalignment or binding of moving parts, breakage of parts and any other condition that may affect the power tool's operation. If damaged, have the power tool repaired before use.*** *Many accidents are caused by poorly maintained power tools.*

f) ***Keep cutting tools sharp and clean.*** *Properly maintained cutting tools with sharp cutting edges are less likely to bind and are easier to control.*

g) ***Use the power tool, accessories and tool bits etc. in accordance with these instructions, taking into account the working conditions and the work to be performed.*** *Use of the power tool for operations different from those intended could result in a hazardous situation.*

h) ***Keep handles and grasping surfaces dry, clean and free from oil and grease.*** *Slippery handles and grasping surfaces do not allow for safe handling and control of the tool in unexpected situations.*

5) Battery Tool Use and Care

a) ***Recharge only with the charger specified by the manufacturer.*** *A charger that is suitable for one type of battery pack may create a risk of fire when used with another battery pack.*

b) ***Use power tools only with specifically designated battery packs.*** *Use of any other battery packs may create a risk of injury and fire.*

c) ***When battery pack is not in use, keep it away from other metal objects, like paper clips, coins, keys, nails, screws or other small metal objects, that can make a connection from one terminal to another.*** *Shorting the battery terminals together may cause burns or a fire.*

d) ***Under abusive conditions, liquid may be ejected from the battery; avoid contact. If contact accidentally occurs, flush with water. If liquid contacts eyes, additionally seek medical help.*** *Liquid ejected from the battery may cause irritation or burns.*

e) ***Do not use a battery pack or tool that is damaged or modified.*** *Damaged or modified batteries may exhibit unpredictable behaviour resulting in fire, explosion or risk of injury.*

f) ***Do not expose a battery pack or tool to fire or excessive temperature.*** *Exposure to fire or temperature above 130 °C may cause explosion.*

g) ***Follow all charging instructions and do not charge the battery pack or tool outside the temperature range specified in the instructions.*** *Charging improperly or at temperatures outside the specified range may damage the battery and increase the risk of fire.*

6) Service

a) ***Have your power tool serviced by a qualified repair person using only identical replacement parts.*** *This will ensure that the safety of the power tool is maintained.*

b) ***Never service damaged battery packs.*** *Service of battery packs should only be performed by the manufacturer or authorized service providers.*

Drill Safety Warnings

Safety Instructions for All Operations

- ***Hold the power tool by insulated gripping surfaces when performing an operation where the cutting accessory or fasteners may contact hidden wiring.*** *Cutting accessory or fasteners contacting a "live" wire may make exposed metal parts of the power tool "live" and could give the operator an electric shock.*

Safety Instructions When Using Long Drill Bits

- ***Never operate at higher speed than the maximum speed rating of the drill bit.*** *At higher speeds, the bit is likely to bend if allowed to rotate freely without contacting the workpiece, resulting in personal injury.*
- ***Always start drilling at low speed and with the bit tip in contact with the workpiece.*** *At higher speeds, the bit is likely to bend if allowed to rotate freely without contacting the workpiece, resulting in personal injury.*
- ***Apply pressure only in direct line with the bit and do not apply excessive pressure.*** *Bits can bend causing breakage or loss of control, resulting in personal injury.*

Additional Specific Safety Rules for Drills/ Drivers/Impact Drills

- ***Use clamps or other practical way to secure and support the workpiece to a stable platform.*** *Holding the work by hand or against your body is unstable and may lead to loss of control.*
- ***Wear safety goggles or other eye protection.*** *Hammering and drilling operations cause chips to fly. Flying particles can cause permanent eye damage.*
- ***Drill bits and tools get hot during operation.*** *Wear gloves when touching them.*
- ***Air vents often cover moving parts and should be avoided.*** *Loose clothes, jewellery or long hair can be caught in moving parts.*

Residual Risks

In spite of the application of the relevant safety regulations and the implementation of safety devices, certain residual risks cannot be avoided. These are:

- *Impairment of hearing.*
- *Risk of personal injury due to flying particles.*
- *Risk of burns due to accessories becoming hot during operation.*
- *Risk of personal injury due to prolonged use.*

SAVE THESE INSTRUCTIONS

Chargers

DEWALT chargers require no adjustment and are designed to be as easy as possible to operate.

Electrical Safety

The electric motor has been designed for one voltage only. Always check that the battery pack voltage corresponds to the voltage on the rating plate. Also make sure that the voltage of your charger corresponds to that of your mains.



Your DEWALTcharger is double insulated in accordance with EN60335; therefore no earth wire is required.

If the supply cord is damaged, it must be replaced only by DEWALT or an authorised service organisation.

Mains Plug Replacement (U.K. & Ireland Only)

If a new mains plug needs to be fitted:

- *Safely dispose of the old plug.*
- *Connect the brown lead to the live terminal in the plug.*
- *Connect the blue lead to the neutral terminal.*

WARNING: *No connection is to be made to the earth terminal.*

Follow the fitting instructions supplied with good quality plugs. Recommended fuse: 3 A.

Using an Extension Cable

An extension cord should not be used unless absolutely necessary. Use an approved extension cable suitable for the power input of your charger (see ***Technical Data***). The minimum conductor size is 1 mm^2; the maximum length is 30 m.

When using a cable reel, always unwind the cable completely.

Important Safety Instructions for All Battery Chargers

SAVE THESE INSTRUCTIONS: This manual contains important safety and operating instructions for compatible battery chargers (refer to ***Technical Data***).

- *Before using charger, read all instructions and cautionary markings on charger, battery pack, and product using battery pack.*

WARNING: *Shock hazard. Do not allow any liquid to get inside charger. Electric shock may result.*

WARNING: *We recommend the use of a residual current device with a residual current rating of 30mA or less.*

CAUTION: *Burn hazard. To reduce the risk of injury, charge only DEWALT rechargeable batteries. Other types of batteries may burst causing personal injury and damage.*

CAUTION: *Children should be supervised to ensure that they do not play with the appliance.*

NOTICE: *Under certain conditions, with the charger plugged into the power supply, the exposed charging contacts inside the charger can be shorted by foreign material. Foreign materials of a conductive nature such as, but not limited to, steel wool, aluminum foil or any buildup of metallic particles should be kept away from charger cavities. Always unplug the charger from the power supply when there is no battery pack in the cavity. Unplug charger before attempting to clean.*

- ***DO NOT attempt to charge the battery pack with any chargers other than the ones in this manual.*** *The charger and battery pack are specifically designed to work together.*
- ***These chargers are not intended for any uses other than charging DEWALT rechargeable batteries.*** *Any other uses may result in risk of fire, electric shock or electrocution.*
- ***Do not expose charger to rain or snow.***
- ***Pull by plug rather than cord when disconnecting charger.*** *This will reduce risk of damage to electric plug and cord.*
- ***Make sure that cord is located so that it will not be stepped on, tripped over, or otherwise subjected to damage or stress.***
- ***Do not use an extension cord unless it is absolutely necessary.*** *Use of improper extension cord could result in risk of fire,electric shock, or electrocution.*
- ***Do not place any object on top of charger or place the charger on a soft surface that might block the ventilation slots and result in excessive internal heat.*** *Place the charger in a position away from any heat source. The charger is ventilated through slots in the top and the bottom of the housing.*
- ***Do not operate charger with damaged cord or plug—*** *have them replaced immediately.*
- ***Do not operate charger if it has received a sharp blow, been dropped, or otherwise damaged in any way.*** *Take it to an authorised service centre.*
- ***Do not disassemble charger; take it to an authorised service centre when service or repair is required.*** *Incorrect reassembly may result in a risk of electric shock, electrocution or fire.*
- *In case of damaged power supply cord, the supply cord must be replaced immediately by the manufacturer, its service agent or similar qualified person to prevent any hazard.*
- ***Disconnect the charger from the outlet before attempting any cleaning. This will reduce the risk of electric shock.*** *Removing the battery pack will not reduce this risk.*
- ***NEVER*** *attempt to connect two chargers together.*
- ***The charger is designed to operate on standard 230V household electrical power. Do not attempt to use it on any other voltage.*** *This does not apply to the vehicular charger.*

Charging a Battery (Fig. B)

1. Plug the charger into an appropriate outlet before inserting battery pack.
2. Insert the battery pack 11 into the charger, making sure the battery pack is fully seated in the charger. The red (charging) light will blink repeatedly indicating that the charging process has started.
3. The completion of charge will be indicated by the red light remaining ON continuously. The battery pack is fully charged and may be used at this time or left in the charger. To remove the battery pack from the charger, push the battery release button 12 on the battery pack.

NOTE: To ensure maximum performance and life of lithium-ion battery packs, charge the battery pack fully before first use.

Charger Operation

Refer to the indicators below for the charge status of the battery pack.

Charge Indicators	
Charging	— — — —
Fully Charged	———
Hot/Cold Pack Delay*	— — — | ———

*The red light will continue to blink, but a yellow indicator light will be illuminated during this operation. Once the battery pack

has reached an appropriate temperature, the yellow light will turn off and the charger will resume the charging procedure.

The compatible charger(s) will not charge a faulty battery pack. The charger will indicate faulty battery by refusing to light.

NOTE: This could also mean a problem with a charger.

If the charger indicates a problem, take the charger and battery pack to be tested at an authorised service centre.

Hot/Cold Pack Delay

When the charger detects a battery pack that is too hot or too cold, it automatically starts a Hot/Cold Pack Delay, suspending charging until the battery pack has reached an appropriate temperature. The charger then automatically switches to the pack charging mode. This feature ensures maximum battery pack life.

A cold battery pack will charge at a slower rate than a warm battery pack. The battery pack will charge at that slower rate throughout the entire charging cycle and will not return to maximum charge rate even if the battery pack warms.

The DCB118 charger is equipped with an internal fan designed to cool the battery pack. The fan will turn on automatically when the battery pack needs to be cooled. Never operate the charger if the fan does not operate properly or if ventilation slots are blocked. Do not permit foreign objects to enter the interior of the charger.

Electronic Protection System

XR Li-Ion tools are designed with an Electronic Protection System that will protect the battery pack against overloading, overheating or deep discharge.

The tool will automatically turn off if the Electronic Protection System engages. If this occurs, place the lithium-ion battery pack on the charger until it is fully charged.

Wall Mounting

These chargers are designed to be wall mountable or to sit upright on a table or work surface. If wall mounting, locate the charger within reach of an electrical outlet, and away from a corner or other obstructions which may impede air flow. Use the back of the charger as a template for the location of the mounting screws on the wall. Mount the charger securely using drywall screws (purchased separately) at least 25.4 mm long with a screw head diameter of 7–9 mm, screwed into wood to an optimal depth leaving approximately 5.5 mm of the screw exposed. Align the slots on the back of the charger with the exposed screws and fully engage them in the slots.

Charger Cleaning Instructions

WARNING: Shock hazard. Disconnect the charger from the AC outlet before cleaning. *Dirt and grease may be removed from the exterior of the charger using a cloth or soft non-metallic brush. Do not use water or any cleaning solutions. Never let any liquid get inside the tool; never immerse any part of the tool into a liquid.*

Battery Packs

Important Safety Instructions for All Battery Packs

When ordering replacement battery packs, be sure to include catalogue number and voltage.

The battery pack is not fully charged out of the carton. Before using the battery pack and charger, read the safety instructions below. Then follow charging procedures outlined.

READ ALL INSTRUCTIONS

- ***Do not charge or use battery in explosive atmospheres, such as in the presence of flammable liquids, gases or dust.*** *Inserting or removing the battery from the charger may ignite the dust or fumes.*
- ***Never force battery pack into charger. Do not modify battery pack in any way to fit into a non-compatible charger as battery pack may rupture causing serious personal injury.***
- *Charge the battery packs only in DEWALT chargers.*
- ***DO NOT*** *splash or immerse in water or other liquids.*
- ***Do not store or use the tool and battery pack in locations where the temperature may fall below 4 ˚C (39.2 ˚F) (such as outside sheds or metal buildings in winter), or reach or exceed 40 ˚C (104 ˚F) (such as outside sheds or metal buildings in summer).***
- ***Do not incinerate the battery pack even if it is severely damaged or is completely worn out.*** *The battery pack can explode in a fire. Toxic fumes and materials are created when lithium-ion battery packs are burned.*
- ***If battery contents come into contact with the skin, immediately wash area with mild soap and water.*** *If battery liquid gets into the eye, rinse water over the open eye for 15 minutes or until irritation ceases. If medical attention is needed, the battery electrolyte is composed of a mixture of liquid organic carbonates and lithium salts.*
- ***Contents of opened battery cells may cause respiratory irritation.*** *Provide fresh air. If symptoms persists, seek medical attention.*

WARNING: *Burn hazard. Battery liquid may be flammable if exposed to spark or flame.*

WARNING: *Never attempt to open the battery pack for any reason. If battery pack case is cracked or damaged, do not insert into charger. Do not crush, drop or damage battery pack. Do not use a battery pack or charger that has received a sharp blow, been dropped, run over or damaged in any way (i.e., pierced with a nail, hit with a hammer, stepped on). Electric shock or electrocution may result. Damaged battery packs should be returned to service centre for recycling.*

WARNING: Fire hazard. Do not store or carry the battery pack so that metal objects can contact exposed battery terminals. *For example, do not place the battery pack in aprons, pockets, tool boxes, product kit boxes, drawers, etc., with loose nails, screws, keys, etc.*

CAUTION: When not in use, place tool on its side on a stable surface where it will not cause a tripping or falling hazard. *Some tools with large battery packs will stand upright on the battery pack but may be easily knocked over.*

Transportation

WARNING: Fire hazard. *Transporting batteries can possibly cause fire if the battery terminals inadvertently come in contact with conductive materials. When transporting batteries, make sure that the battery terminals are protected and well insulated from materials that could contact them and cause a short circuit.* ***NOTE:*** *Lithium-ion batteries should not be put in checked baggage.*

DEWALT batteries comply with all applicable shipping regulations as prescribed by industry and legal standards which include UN Recommendations on the Transport of Dangerous Goods; International Air Transport Association (IATA) Dangerous Goods Regulations, International Maritime Dangerous Goods (IMDG) Regulations, and the European Agreement Concerning The International Carriage of Dangerous Goods by Road (ADR). Lithium-ion cells and batteries have been tested to section 38.3 of the UN Recommendations on the Transport of Dangerous Goods Manual of Tests and Criteria.

In most instances, shipping a DEWALT battery pack will be excepted from being classified as a fully regulated Class 9 Hazardous Material. In general, only shipments containing a lithium-ion battery with an energy rating greater than 100 Watt Hours (Wh) will require being shipped as fully regulated Class 9. All lithium-ion batteries have the Watt Hour rating marked on the pack. Furthermore, due to regulation complexities, DEWALT does not recommend air shipping lithium-ion battery packs alone regardless of Watt Hour rating. Shipments of tools with batteries (combo kits) can be air shipped as excepted if the Watt Hour rating of the battery pack is no greater than 100 Wh.

Regardless of whether a shipment is considered excepted or fully regulated, it is the shipper's responsibility to consult the latest regulations for packaging, labeling/marking and documentation requirements.

The information provided in this section of the manual is provided in good faith and believed to be accurate at the time the document was created. However, no warranty, expressed or implied, is given. It is the buyer's responsibility to ensure that its activities comply with the applicable regulations.

Transporting the FLEXVOLT™ Battery

The DEWALT FLEXVOLT™ battery has two modes: **Use** and **Transport**.

Use Mode: When the FLEXVOLT™ battery stands alone or is in a DEWALT 18V product, it will operate as an 18V battery. When the FLEXVOLT™ battery is in a 54V or a 108V (two 54V batteries) product, it will operate as a 54V battery.

Transport Mode: When the cap is attached to the FLEXVOLT™ battery, the battery is in Transport mode. Keep the cap for shipping.

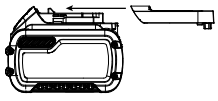

When in Transport mode, strings of cells are electrically disconnected within the pack resulting in 3 batteries with a lower Watt hour (Wh) rating as compared to 1 battery with a higher Watt hour rating. This increased quantity of 3 batteries with the lower Watt hour rating can exempt the pack from certain shipping regulations that are imposed upon the higher Watt hour batteries.

For example, the Transport Wh rating might indicate 3 x 36 Wh, meaning 3 batteries of 36 Wh each. The Use Wh rating might indicate 108 Wh (1 battery implied).

Example of Use and Transport Label Marking



Storage Recommendations

1. The best storage place is one that is cool and dry away from direct sunlight and excess heat or cold. For optimum battery performance and life, store battery packs at room temperature when not in use.
2. For long storage, it is recommended to store a fully charged battery pack in a cool, dry place out of the charger for optimal results.

NOTE: Battery packs should not be stored completely depleted of charge. The battery pack will need to be recharged before use.

Labels on Charger and Battery Pack

In addition to the pictographs used in this manual, the labels on the charger and the battery pack may show the following pictographs:



Read instruction manual before use.



See ***Technical Data*** for charging time.



Do not probe with conductive objects.



Do not charge damaged battery packs.



Do not expose to water.



Have defective cords replaced immediately



Charge only between 4 °C and 40 °C.



Only for indoor use.



Discard the battery pack with due care for the environment.



Charge *DEWALT* battery packs only with designated DEWALT chargers. Charging battery packs other than the designated DEWALT batteries with a DEWALT charger may make them burst or lead to other dangerous situations.


Do not incinerate the battery pack.


USE (without transport cap). Example: Wh rating indicates 108 Wh (1 battery with 108 Wh).


TRANSPORT (with built-in transport cap). Example: Wh rating indicates 3 x 36 Wh (3 batteries of 36 Wh).

Battery Type

The following tools operate on an 18 volt battery pack:
DCD800, DCD805

These battery packs may be used: DCB181, DCB182, DCB183, DCB183B, DCB183G, DCB184, DCB184B, DCB184G, DCB185, DCB187, DCB189, DCBP034, DCB546, DCB547, DCB549, DCBP518. Refer to ***Technical Data*** for more information.

Package Contents

The package contains:

1 Drill/driver or 1 drill/driver/hammerdrill
1 Charger
1 Li-Ion battery pack (C1, D1, E1, G1, H1, L1, M1, P1, Q1, S1, T1, U1, X1, Y1, Z1 models)
2 Li-Ion battery packs (C2, D2, E2, G2, H2, L2, M2, P2, Q2, S2, T2, U2, X2, Y2, Z2 models)
3 Li-Ion battery packs (C3, D3, E3, G3, H3, L3, M3, P3, Q3, S3, T3, U3, X3, Y3, Z3 models)
1 Instruction manual

NOTE: Battery packs, chargers and kitboxes are not included with N models. Battery packs and chargers are not included with NT models. B models include Bluetooth® battery packs.

NOTE: The Bluetooth® word mark and logos are registered trademarks owned by the Bluetooth®, SIG, Inc. and any use of such marks by DEWALT is under license. Other trademarks and trade names are those of their respective owners.

- *Check for damage to the tool, parts or accessories which may have occurred during transport.*
- *Take the time to thoroughly read and understand this manual prior to operation.*

Markings on Tool

The following pictograms are shown on the tool:


Read instruction manual before use.


Visible radiation. Do not stare into light.

Date Code Position (Fig. B)

The date code **14**, which also includes the year of manufacture, is printed into the housing.

Example:

2022 XX XX

Year and Week of Manufacture

Description (Fig. A)

WARNING: *Never modify the power tool or any part of it. Damage or personal injury could result.*

1 Trigger switch
2 Forward/reverse control button
3 Torque adjustment collar
4 Gear shifter
5 Worklight
6 Keyless chuck
7 Chuck sleeve
8 Belt hook
9 Mounting screw
10 Bit holder
11 Battery pack
12 Battery release button
13 Worklight switch

Intended Use

These drills/drivers/hammerdrills are designed for professional drilling, percussion drilling and screwdriving applications.

DO NOT use under wet conditions or in the presence of flammable liquids or gases.

These drills/drivers/hammerdrills are professional power tools.

DO NOT let children come into contact with the tool. Supervision is required when inexperienced operators use this tool.

- **Young children and the infirm.** This appliance is not intended for use by young children or infirm persons without supervision.
- This product is not intended for use by persons (including children) suffering from diminished physical, sensory or mental abilities; lack of experience, knowledge or skills unless they are supervised by a person responsible for their safety. Children should never be left alone with this product.

ASSEMBLY AND ADJUSTMENTS

WARNING: To reduce the risk of serious personal injury, turn tool off and disconnect tool from power source before making any adjustments or removing/installing attachments or accessories. *An accidental start-up can cause injury.*

Inserting and Removing the Battery Pack from the Tool (Fig. B)

NOTE: Make sure your battery pack **11** is fully charged.

To Install the Battery Pack into the Tool Handle

1. Align the battery pack with the rails inside the tool's handle (Fig. B).
2. Slide it into the handle until the battery pack is firmly seated in the tool and ensure that you hear the lock snap into place.

To Remove the Battery Pack from the Tool

1. Press the battery release button **12** and firmly pull the battery pack out of the tool handle.

2. Insert battery pack into the charger as described in the charger section of this manual.

Fuel Gauge Battery Packs (Fig. B)

Some DEWALT battery packs include a fuel gauge which consists of three green LED lights that indicate the level of charge remaining in the battery pack.

To actuate the fuel gauge, press and hold the fuel gauge button 15. A combination of the three green LED lights will illuminate designating the level of charge left. When the level of charge in the battery is below the usable limit, the fuel gauge will not illuminate and the battery will need to be recharged.

NOTE: The fuel gauge is only an indication of the charge left on the battery pack. It does not indicate tool functionality and is subject to variation based on product components, temperature and end-user application.

Belt Hook and Magnetic Bit Holder (Fig. A)

Optional Accessories

WARNING: To reduce the risk of serious personal injury, ONLY use the tool's belt hook to hang the tool from a work belt. DO NOT *use the belt hook for tethering or securing the tool to a person or object during use. DO NOT suspend tool overhead or suspend objects from the belt hook.*

WARNING: To reduce the risk of serious personal injury, *ensure the screw holding the belt hook is secure.*

CAUTION: To reduce the risk of personal injury or damage, DO NOT use the belt hook to hang the drill while using as a spotlight.

IMPORTANT: When attaching or replacing the belt hook 8 or magnetic bit holder 10, use only the mounting screw 9 that is provided. Be sure to securely tighten the screw.

The belt hook and magnetic bit holder can be be attached to either side of the tool using only the screw provided, to accommodate left- or right- handed users. If the hook or magnetic bit holder is not desired at all, it can be removed from the tool.

To move belt hook or bit clip, remove the screw that holds it in place then reassemble on the opposite side. Be sure to securely tighten the screw.

Variable Speed Trigger Switch (Fig. A)

To turn the tool on, squeeze the variable speed trigger switch 1. To turn the tool off, release the trigger switch. Your tool is equipped with a brake. The chuck will stop as soon as the trigger switch is fully released.

NOTE: Continuous use in variable speed range is not recommended. It may damage the switch and should be avoided.

Forward/Reverse Control Button (Fig. A)

A forward/reverse control button 2 determines the direction of the tool and also serves as a lock-off button.

To select forward rotation, release the trigger switch and depress the forward/reverse control button on the right side of the tool.

To select reverse, release the trigger switch and depress the forward/reverse control button on the left side of the tool.

The centre position of the control button locks the tool in the off position. When changing the position of the control button, be sure the trigger is released.

NOTE: The first time the tool is run after changing the direction of rotation, you may hear a click on start up. This is normal and does not indicate a problem.

Torque Adjustment Collar (Fig. A)

Your tool has an adjustable torque screwdriver mechanism for driving and removing a wide array of fastener shapes and sizes and in some models, a hammer mechanism for drilling into masonry. Circling the torque adjustment collar 3 are numbers, a drill bit symbol, and on some models, a hammer symbol. These numbers are used to set the clutch to deliver a torque range. The higher the number on the collar, the higher the torque and the larger the fastener which can be driven. To select any of the numbers, rotate until the desired number aligns with the arrow.

Dual Range Gearing (Fig. A)

The dual range feature of your drill/driver allows you to shift gears for greater versatility.

1. To select speed 1 (high torque setting), turn the tool off and permit it to stop. Slide the gear shifter 4 forward (towards the chuck).
2. To select speed 2 (low torque setting), turn the tool off and permit it to stop. Slide the gear shifter back (away from the chuck).

NOTE: Do not change gears when the tool is running. Always allow the drill to come to a complete stop before changing gears. If you are having trouble changing gears, make sure that the dual range gear shifter is either completely pushed forward or completely pushed back.

Pivoting LED Worklight (Fig. A, E)

CAUTION: Do not stare into worklight. *Serious eye injury could result.*

The worklight 5 located on the foot of the tool is activated when the trigger switch is depressed and is adjustable via three detent positions. The off 17, on 18, and spotlight 19 modes can be changed by moving the worklight switch 13 on the foot of tool. In the on setting, the worklight will stay illuminated for up to 20 seconds. If the trigger switch remains depressed, the worklight will remain on.

NOTE: The worklight is for lighting the immediate work surface and are not intended to be used as a flashlight.

Spotlight Mode

The spotlight will run for 20 minutes after the trigger switch is released. Two minutes before the spotlight will shut off, it will flash twice and then dim. To avoid the spotlight shutting off, lightly tap the trigger switch.

WARNING: While using the worklight in medium or spotlight mode, do not stare at the light or place the drill in a position which may cause anyone to stare into the light. *Serious eye injury could result.*

CAUTION: *When using the tool as a spotlight, be sure it is secured on a stable surface where it will not cause a tripping or falling hazard.*

CAUTION: *Remove all accessories from the chuck before using the drill as a spotlight. Personal injury or property damage could result.*

Low Battery Warning

When in spotlight mode and the battery is nearing complete discharge, the spotlight will flash twice and then dim. After two minutes, the battery will be completely discharged and the drill will immediately shut down. At this point, replace with a fresh battery.

WARNING: *To reduce the risk of injury, always have a back-up battery or secondary lighting available if the situation warrants it.*

Keyless Single Sleeve Chuck (Fig. C)

WARNING: *Do not attempt to tighten drill bits (or any other accessory) by gripping the front part of the chuck and turning the tool on. Damage to the chuck and personal injury may result. Always lock off trigger switch and remove the battery from the tool when changing accessories.*

WARNING: *Always ensure the bit is secure before starting the tool. A loose bit may eject from tool causing possible personal injury.*

Your tool features a keyless chuck **6** with one rotating chuck sleeve **7** for one-handed operation of the chuck. To insert a drill bit or other accessory, follow these steps.

1. Turn tool off and remove the battery pack.
2. Grasp the black sleeve of the chuck with one hand and use the other hand to secure the tool. Rotate the sleeve anticlockwise (as viewed from the front) far enough to accept the desired accessory.
3. Insert the accessory about 19 mm into the chuck and tighten securely by rotating the chuck sleeve clockwise with one hand while holding the tool with the other hand. Continue to rotate the chuck sleeve until several ratchet clicks are heard to ensure full gripping power.
   NOTE: Be sure to tighten chuck with one hand on the chuck sleeve and one hand holding the tool for maximum tightness.

To release the accessory, repeat steps 1 and 2 above.

OPERATION

Instructions for Use

WARNING: *Always observe the safety instructions and applicable regulations.*

WARNING: To reduce the risk of serious personal injury, turn tool off and disconnect battery pack before making any adjustments or removing/ installing attachments or accessories. *An accidental start-up can cause injury.*

Proper Hand Position (Fig. D)

WARNING: *To reduce the risk of serious personal injury,* ***ALWAYS*** *use proper hand position as shown.*

WARNING: *To reduce the risk of serious personal injury,* ***ALWAYS*** *hold securely in anticipation of a sudden reaction.*

Proper hand position requires one hand on the main handle **16** and one hand on the battery pack.

Drill Operation (Fig. A, D)

WARNING: TO REDUCE THE RISK OF PERSONAL INJURY, ALWAYS *ensure workpiece is anchored or clamped firmly. If drilling thin material, use a wood "back-up" block to prevent damage to the material.*

1. Turn the collar **3** to the drill symbol.
2. Select the desired speed/torque range using the gear shifter **4** to match the speed and torque to the planned operation.
3. For Wood, use twist bits, spade bits, power auger bits or hole saws. For Metal, use high-speed steel twist drill bits or hole saws. Use a cutting lubricant when drilling metals. The exceptions are cast iron and brass which should be drilled dry.
4. Always apply pressure in a straight line with the bit. Use enough pressure to keep drill biting, but do not push hard enough to stall the motor or deflect the bit.
5. Hold tool firmly with both hands to control the twisting action of the drill. If model is not equipped with side handle, grip drill with one hand on the handle and one hand on the battery pack.

   CAUTION: *Drill may stall if overloaded causing a sudden twist. Always expect the stall. Grip the drill firmly to control the twisting action and avoid injury.*
6. **IF DRILL STALLS,** it is usually because it is being overloaded or improperly used. **RELEASE TRIGGER IMMEDIATELY,** remove drill bit from work, and determine cause of stalling. **DO NOT CLICK TRIGGER ON AND OFF IN AN ATTEMPT TO START A STALLED DRILL — THIS CAN DAMAGE THE DRILL.**
7. To minimise stalling or breaking through the material, reduce pressure on drill and ease the bit through the last fractional part of the hole.
8. Keep the motor running when pulling the bit back out of a drilled hole. This will help prevent jamming.

9. With variable speed drills there is no need to centre punch the point to be drilled. Use a slow speed to start the hole and accelerate by squeezing the trigger harder when the hole is deep enough to drill without the bit skipping out.

Hammerdrill Operation (Fig. A, D)

DCD805 only

1. Turn the collar 3 to the hammerdrill symbol.
2. Select the high speed setting by sliding the gear shifter 4 back (away from the chuck).
   IMPORTANT: Use carbide-tipped or masonry bits only.
3. Drill with just enough force on the hammer to keep it from bouncing excessively or "rising" off the bit. Too much force will cause slower drilling speeds, overheating and lower drilling rate.
4. Drill straight, keeping the bit at a right angle to the work. Do not exert side pressure on the bit when drillling as this will cause clogging of the bit flutes and a slower drilling speed.
5. When drilling deep holes, if the hammer speed starts to drop off, pull the bit partially out of the hole with tool still running to help clear debris from the hole.

NOTE: A smooth, even flow of dust from the hole indicates proper drilling rate.

Screwdriver Operation (Fig. A, D)

1. Turn the torque adjustment collar 3 to the desired position.
2. Select the desired speed/torque range using the gear shifter 4 to match the speed and torque of the planned operation.
   NOTE: Use the lowest torque setting required to seat the fastener at the desired depth. The lower the number, the lower the torque output.
3. Insert the desired fastener accessory into the chuck as you would any drill bit.
4. Make some practice runs in scrap or on unseen areas to determine the proper position of the clutch collar.
5. Always start with lower torque settings, then advance to higher torque settings to avoid damage to the workpiece or fastener.

MAINTENANCE

Your power tool has been designed to operate over a long period of time with a minimum of maintenance. Continuous satisfactory operation depends upon proper tool care and regular cleaning.

WARNING: To reduce the risk of serious personal injury, turn tool off and disconnect battery pack before making any adjustments or removing/ installing attachments or accessories. *An accidental start-up can cause injury.*

The charger and battery pack are not serviceable.

Lubrication

Your power tool requires no additional lubrication.

Cleaning

WARNING: *Blow dirt and dust out of the main housing with dry air as often as dirt is seen collecting in and around the air vents. Wear approved eye protection and approved dust mask when performing this procedure.*

WARNING: *Never use solvents or other harsh chemicals for cleaning the non-metallic parts of the tool. These chemicals may weaken the materials used in these parts. Use a cloth dampened only with water and mild soap. Never let any liquid get inside the tool; never immerse any part of the tool into a liquid.*

Optional Accessories

WARNING: *Since accessories, other than those offered by DEWALT, have not been tested with this product, use of such accessories with this tool could be hazardous. To reduce the risk of injury, only DEWALT recommended accessories should be used with this product.*

Consult your dealer for further information on the appropriate accessories.

Protecting the Environment

Separate collection. Products and batteries marked with this symbol must not be disposed of with normal household waste.

Products and batteries contain materials that can be recovered or recycled reducing the demand for raw materials. Please recycle electrical products and batteries according to local provisions. Further information is available at **www.2helpU.com**.

Rechargeable Battery Pack

This long life battery pack must be recharged when it fails to produce sufficient power on jobs which were easily done before. At the end of its technical life, discard it with due care for our environment:

- Run the battery pack down completely, then remove it from the tool.
- Li-Ion cells are recyclable. Take them to your dealer or a local recycling station. The collected battery packs will be recycled or disposed of properly.

TALADRO
DCD800
TALADRO/TALADRO DE IMPACTO
DCD805

¡Enhorabuena!

Ha elegido una herramienta DEWALT. Años de experiencia, innovación y un exhaustivo desarrollo de productos hacen que DEWALT sea una de las empresas más fiables para los usuarios de herramientas eléctricas profesionales.

Datos técnicos

		DCD800	DCD805
Voltaje	V_{CC}	18	18
Tipo		1	1
Tipo de batería		Iones de litio	Iones de litio
Velocidad en vacío			
1.ª velocidad	min^{-1}	0–650	0–650
2.ª velocidad	min^{-1}	0–2000	0–2000
Frecuencia de impacto			
1.ª velocidad	min^{-1}	—	0–11050
2.ª velocidad	min^{-1}	—	0–34000
Par máximo (duro/blando)	Nm	90/27	90/27
Capacidad del portabrocas	mm	1,5–13,0	1,5–13,0
Capacidad de taladrado máxima			
Madera	mm	55	55
Metal	mm	13	13
Mampostería	mm	—	13
Peso (sin batería)	kg	1,28	1,34

Valores de ruido y/o valores de vibración (suma vectores triaxiales) de acuerdo con EN62841-2-1:			
L_{PA} (nivel de presión sonora de emisión)	dB(A)	74	90
L_{WA} (nivel de potencia sonora)	dB(A)	85	101
K (incertidumbre para el nivel de sonido dado)	dB(A)	5	5
Perforación en metal			
Valor de emisión de vibraciones $a_{h,\,D}$ =	m/s^2	< 2,5	< 2,5
Incertidumbre K =	m/s^2	1,5	1,5
Perforación en hormigón			
Valor de emisión de vibraciones $a_{h,\,ID}$ =	m/s^2	—	11
Incertidumbre K =	m/s^2	—	1,5

El nivel de emisión de vibraciones y/o ruido que figura en esta hoja de información ha sido medido de conformidad con una prueba normalizada prevista en las normas EN62841 y puede utilizarse para comparar herramientas entre sí. Puede usarse para una evaluación preliminar de exposición.

ADVERTENCIA: *El nivel de emisión de vibraciones y/o ruido declarado representa las principales aplicaciones de la herramienta. Sin embargo, si se utiliza la herramienta para distintas aplicaciones, con accesorios diferentes o mal mantenidos, la emisión de vibraciones y/o ruido puede variar. Esto puede aumentar considerablemente el nivel de exposición durante el período total de trabajo.*

Una valoración del nivel de exposición a las vibraciones y/o ruido también debería tener en cuenta las veces en que la herramienta está apagada o en funcionamiento pero sin realizar ningún trabajo. Esto puede reducir considerablemente el nivel de exposición durante el periodo total de trabajo.

Identifique medidas de seguridad adicionales para proteger al operador de los efectos de las vibraciones y/o el ruido, como por ejemplo: efectuar el mantenimiento de la herramienta y los accesorios, mantener las manos calientes (relevante para las vibraciones) y organizar patrones de trabajo.

Declaración de conformidad CE

Directiva de máquinas

CE

Taladro/Taladro de impacto DCD800, DCD805

DEWALT declara que los productos descritos en ***Datos técnicos*** son conformes a:
2006/42/EC, EN62841-1:2015, EN62841-2-1:2018+A11:2019.

Estos productos también son conformes a las directivas 2014/30/UE y 2011/65/UE. Si desea obtener más información, póngase en contacto con DEWALT a través de la siguiente dirección o consulte el dorso del manual.

El abajo firmante es el responsable de la elaboración de la documentación técnica y expide la presente declaración en nombre y representación de DEWALT.



Markus Rompel
Vicepresidente de Ingeniería, PTE-Europa
DEWALT, Richard-Klinger-Straße 11,
65510, Idstein, Alemania
30.10.2021

Pilas				Tiempo Cargadores/Carga (Minutos)***									
Cat #	V_{DC}	Ah	Peso (kg)	DCB104	DCB107	DCB112/ DCB1102	DCB113	DCB115/ DCB1104	DCB116	DCB117	DCB118	DCB132	DCB119
DCB546	18/54	6.0/2.0	1.08	60	270	170	140	90	80	40	60	90	X
DCB547	18/54	9.0/3.0	1.46	75*	420	270	220	135*	110*	60	75*	135*	X
DCB549	18/54	15.0/5.0	2.12	125	730	450	380	230	170	90	125	230	X
DCB181	18	1.5	0.35	22	70	45	35	22	22	22	22	22	45
DCB182	18	4.0	0.61	60/40**	185	120	100	60	60/45**	60/40**	60/40**	60	120
DCB183/B/G	18	2.0	0.40	30	90	60	50	30	30	30	30	30	60
DCB184/B/G	18	5.0	0.62	75/50**	240	150	120	75	75/60**	75/50**	75/50**	75	150
DCB185	18	1.3	0.35	22	60	40	30	22	22	22	22	22	40
DCB187	18	3.0	0.54	45	140	90	70	45	45	45	45	45	90
DCB189	18	4.0	0.54	60	185	120	100	60	60	60	60	60	120
DCBP034	18	1.7	0.32	27	82	50	40	27	27	27	27	27	50
DCBP518	18	5.0	0.75	75	240	150	120	75	75	75	75	75	150

**Código de fecha 201811475B o posterior*

***Código de fecha 201536 o posterior*

****Esta matriz tiene carácter orientativo, exclusivamente; los tiempos variarán dependiendo de la temperatura y del estado de la batería.*



ADVERTENCIA: *para reducir el riesgo de lesiones, lea el manual de instrucciones.*

Definiciones: normas de seguridad

Las siguientes definiciones describen el nivel de gravedad de las señales. Lea el manual y preste atención a estos símbolos.



PELIGRO: *indica una situación de peligro inminente, que si no se evita,* ***provocará*** *la* ***muerte o lesiones graves****.*

ADVERTENCIA: *indica una situación de posible peligro que, si no se evita, podría provocar la muerte o lesiones graves.*



ATENCIÓN: *indica una situación de posible peligro que, si no se evita, puede provocar lesiones leves o moderadas.*

AVISO: *Indica una práctica* ***no relacionada con las lesiones personales*** *que, de no evitarse,* ***puede*** *ocasionar* ***daños materiales****.*



Indica riesgo de descarga eléctrica.



Indica riesgo de incendio.

ADVERTENCIAS DE SEGURIDAD GENERALES PARA HERRAMIENTAS ELÉCTRICAS



ADVERTENCIA: Lea todas las advertencias de seguridad, instrucciones, ilustraciones y especificaciones suministradas con esta herramienta eléctrica. *El incumplimiento de las instrucciones que se indican a continuación puede causar descargas eléctricas, incendios y/o lesiones graves.*

CONSERVE TODAS LAS ADVERTENCIAS E INSTRUCCIONES PARA FUTURAS CONSULTAS

El término "herramienta eléctrica" que aparece en las advertencias se refiere a la herramienta eléctrica que funciona a través de la red eléctrica (con cable) o a la herramienta eléctrica que funciona con batería (sin cable).

1) Seguridad en el Área de Trabajo

a) ***Mantenga el área de trabajo limpia y bien iluminada.*** *Las áreas en desorden u oscuras pueden provocar accidentes.*

b) ***No utilice herramientas eléctricas en atmósferas explosivas, como ambientes donde haya polvo, gases o líquidos inflamables.*** *Las herramientas eléctricas originan chispas que pueden inflamar el polvo o los gases.*

c) ***Mantenga alejados a los niños y a las personas que estén cerca mientras utiliza una herramienta eléctrica.*** *Las distracciones pueden ocasionar que pierda el control.*

2) Seguridad Eléctrica

a) ***Los enchufes de las herramientas eléctricas deben corresponderse con la toma de corriente. No modifique nunca el enchufe de ninguna forma. No utilice ningún enchufe adaptador con herramientas eléctricas conectadas a tierra.*** *Los enchufes no modificados y las tomas de corriente correspondientes reducirán el riesgo de descarga eléctrica.*

b) ***Evite el contacto del cuerpo con superficies conectadas a tierra como tuberías, radiadores, cocinas económicas y frigoríficos.*** *Existe un mayor riesgo de descarga eléctrica si tiene el cuerpo conectado a tierra.*

c) ***No exponga las herramientas eléctricas a la lluvia ni a condiciones húmedas.*** *Si entra agua a una herramienta eléctrica aumentará el riesgo de descarga eléctrica.*

d) ***No someta el cable de alimentación a presión innecesaria. No use nunca el cable para transportar,***

tirar de la herramienta eléctrica o desenchufarla. Mantenga el cable alejado del calor, aceite, bordes afilados y piezas en movimiento. *Los cables dañados o enredados aumentan el riesgo de descarga eléctrica.*

e) ***Cuando esté utilizando una herramienta eléctrica al aire libre, use un cable alargador adecuado para uso en exteriores.*** *La utilización de un cable adecuado para el uso en exteriores reduce el riesgo de descarga eléctrica.*

f) ***Si no puede evitar utilizar una herramienta eléctrica en un lugar húmedo, use un suministro protegido con un dispositivo de corriente residual.*** *El uso de un dispositivo de corriente residual reduce el riesgo de descarga eléctrica.*

3) Seguridad Personal

a) ***Manténgase alerta, esté atento a lo que hace y use el sentido común cuando utilice una herramienta eléctrica. No maneje una herramienta eléctrica cuando esté cansado o bajo los efectos de drogas, medicamentos o alcohol.*** *Un momento de falta de atención cuando se manejan las herramientas eléctricas puede ocasionar lesiones personales graves.*

b) ***Use un equipo protector personal. Utilice siempre protección ocular.*** *El uso del equipo protector como mascarillas antipolvo, calzado antideslizante, casco o protección auditiva para condiciones apropiadas reducirá las lesiones personales.*

c) ***Evite la puesta en funcionamiento involuntaria. Asegúrese de que el interruptor esté en posición de apagado antes de conectar con la fuente de alimentación y/o la batería, de levantar o transportar la herramienta.*** *El transportar herramientas eléctricas con el dedo puesto en el interruptor o herramientas eléctricas activadoras que tengan el interruptor encendido puede provocar accidentes.*

d) ***Saque toda llave de ajuste o llave inglesa antes de encender la herramienta eléctrica.*** *Una llave inglesa u otra llave que se deje puesta en una pieza en movimiento de la herramienta eléctrica pueden ocasionar lesiones personales.*

e) ***No intente extender las manos demasiado. Mantenga un apoyo firme sobre el suelo y conserve el equilibrio en todo momento.*** *Esto permite un mejor control de la herramienta eléctrica en situaciones inesperadas.*

f) ***Vístase debidamente. No se ponga ropa suelta o joyas. Mantenga el pelo, la ropa y los guantes alejados de las piezas móviles.*** *La ropa suelta, las joyas y el pelo largo pueden quedar atrapados en las piezas en movimiento.*

g) ***Si se suministran dispositivos para la conexión del equipo de extracción y recogida de polvo, asegúrese de que estén conectados y de que se usen adecuadamente.*** *El uso de equipo de recogida de polvo puede reducir los riesgos relacionados con el polvo.*

h) ***No deje que la familiaridad adquirida con el uso frecuente de las herramientas le lleve a fiarse demasiado y a descuidar las principales normas de seguridad de la herramienta.*** *Los descuidos pueden causar lesiones graves en una fracción de segundo.*

4) Uso y cuidado de las herramientas Eléctricas

a) ***No fuerce la herramienta eléctrica. Use la herramienta eléctrica correcta para su trabajo.*** *La herramienta eléctrica correcta funcionará mejor y con mayor seguridad si se utiliza de acuerdo con sus características técnicas.*

b) ***No utilice la herramienta eléctrica si no puede encenderse y apagarse con el interruptor.*** *Toda herramienta eléctrica que no pueda controlarse con el interruptor es peligrosa y debe ser reparada.*

c) ***Desconecte el enchufe de la fuente de alimentación y/o extraiga la batería de la herramienta eléctrica, si es desmontable, antes de realizar cualquier ajuste, cambiar accesorios o guardar las herramientas eléctricas.*** *Dichas medidas de seguridad preventivas reducen el riesgo de poner en marcha accidentalmente la herramienta eléctrica.*

d) ***Guarde las herramientas eléctricas que no esté utilizando fuera del alcance de los niños y no permita que utilicen la herramienta eléctrica las personas que no estén familiarizadas con ella o con estas instrucciones.*** *Las herramientas eléctricas son peligrosas en manos de personas no capacitadas.*

e) ***Ocúpese del mantenimiento de las herramientas eléctricas. Compruebe si hay desalineación o bloqueo de las piezas en movimiento, rotura de piezas y otras condiciones que puedan afectar el funcionamiento de la herramienta eléctrica. Si la herramienta eléctrica está dañada, llévela para que sea reparada antes de utilizarla.*** *Se ocasionan muchos accidentes por el mal mantenimiento de las herramientas eléctricas.*

f) ***Mantenga las herramientas para cortar afiladas y limpias.*** *Hay menos probabilidad de que las herramientas para cortar con bordes afilados se bloqueen y son más fáciles de controlar.*

g) ***Use la herramienta eléctrica, los accesorios y las brocas de la herramienta etc., conforme a estas instrucciones teniendo en cuenta las condiciones de trabajo y el trabajo que vaya a realizarse.*** *El uso de la herramienta eléctrica para operaciones que no sean las previstas puede ocasionar una situación peligrosa.*

h) ***Mantenga todas las empuñaduras y superficies de agarre secas, limpias y libres de aceite y grasa.*** *Las empuñaduras y superficies de agarre resbaladizas impiden el agarre y el control seguro de la herramienta en situaciones imprevistas.*



www.DEWALT.com

DCF850

Copyright DEWALT

Fig. A

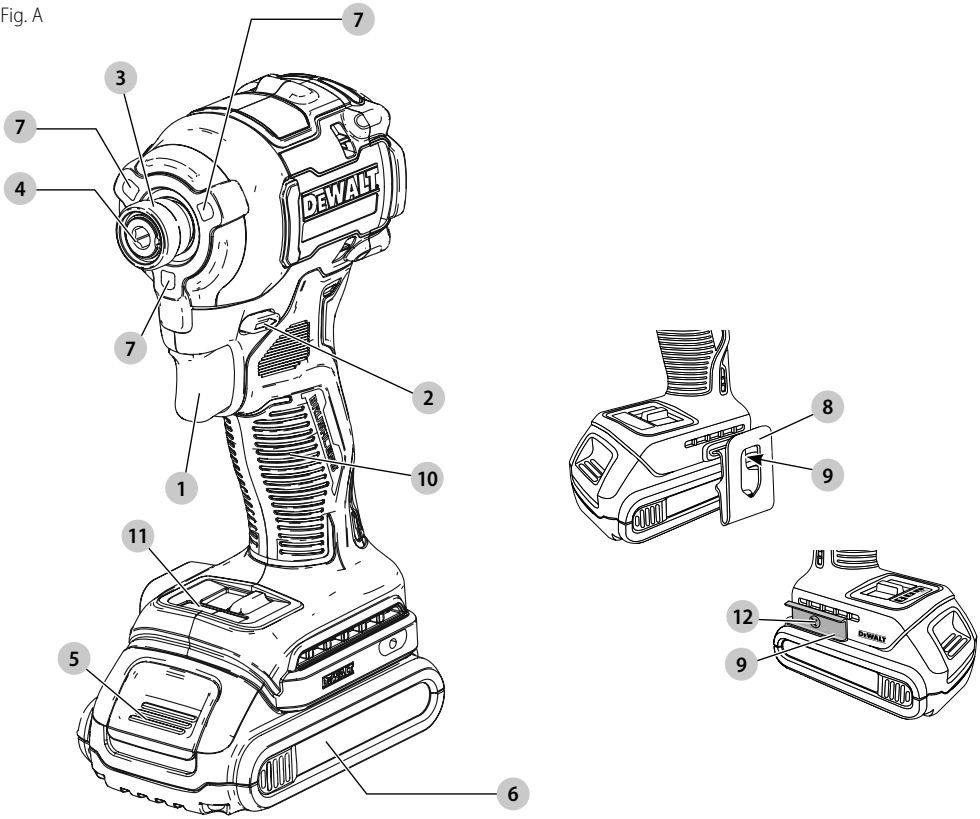

Fig. B

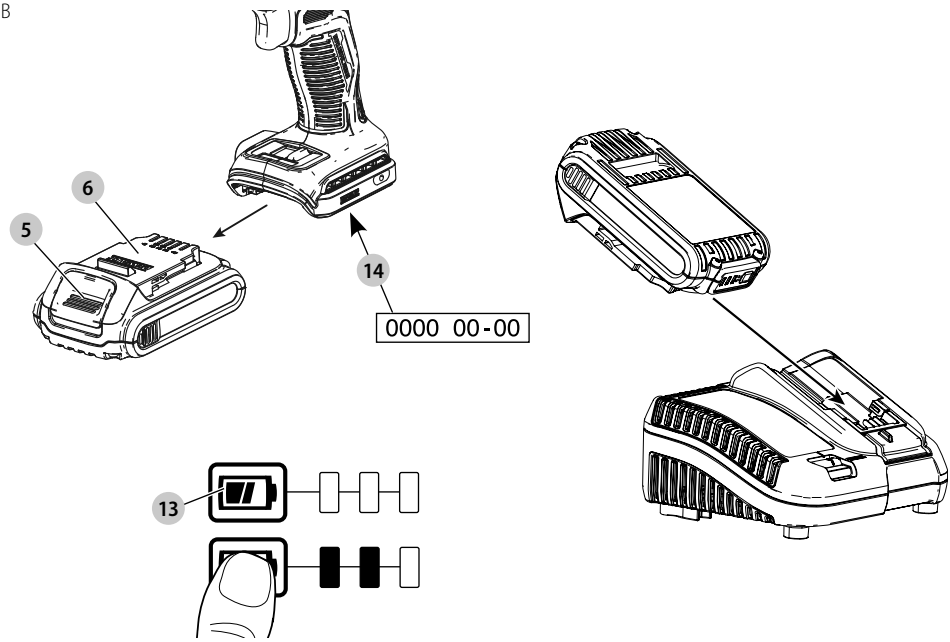

Fig. C

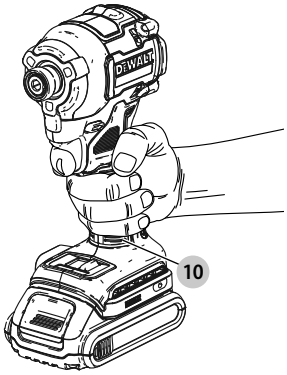

Fig. D

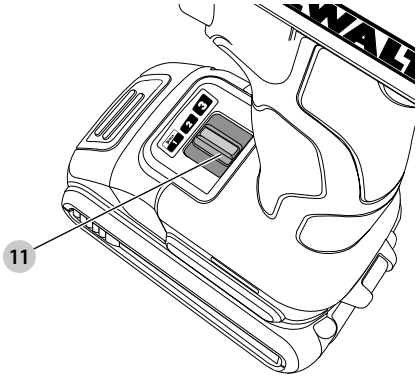

Fig. E

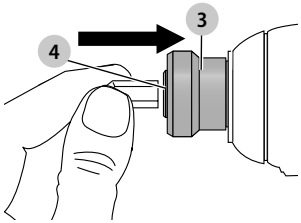

Fig. F

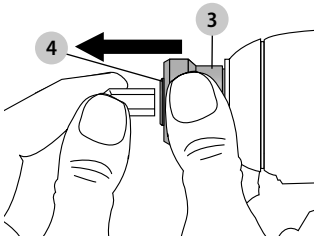

BRUSHLESS CORDLESS COMPACT IMPACT DRIVER DCF850

Congratulations!

You have chosen a DEWALT tool. Years of experience, thorough product development and innovation make DEWALT one of the most reliable partners for professional power tool users.

Technical Data

		DCF850
Voltage	V_{DC}	18
Type		1/10/20
Battery type		Li-Ion
Power output	W	475
No load speed	rpm	
Mode 1		0–1000
Mode 2		0–2800
Mode 3		0–3250
Impact rate	ipm	0–3800
Max torque	Nm	206.2
Tool holder	mm	6.35
Weight (without battery pack)	kg	0.95

Noise values and vibration values (triax vector sum) according to EN62841-2-2:		
L_{PA} (emission sound pressure level)	dB(A)	88
L_{WA} (sound power level)	dB(A)	99
K (uncertainty for the given sound level)	dB(A)	3

Vibration emission value a_h =	m/s^2	18.5
Uncertainty K =	m/s^2	1.7

The vibration and/or noise emission level given in this information sheet has been measured in accordance with a standardised test given in EN62841 and may be used to compare one tool with another. It may be used for a preliminary assessment of exposure.

WARNING: *The declared vibration and/or noise emission level represents impact tightening of fasteners of the maximum capapcity of the tool. However if the tool is used for different applications, with different accessories or poorly maintained, the vibration and/or noise emission may differ. This may significantly increase the exposure level over the total working period.*

An estimation of the level of exposure to vibration and/or noise should also take into account the times when the tool is switched off or when it is running but not actually doing the job. This may significantly reduce the exposure level over the total working period.

Identify additional safety measures to protect the operator from the effects of vibration and/or noise such as: maintain the tool and the accessories, keep the hands warm (relevant for vibration), organisation of work patterns.

EC-Declaration of Conformity

Machinery Directive

CE

Brushless Cordless Compact Impact Driver DCF850

DEWALT declares that these products described under ***Technical Data*** are in compliance with:
2006/42/EC, EN62841-1:2015, EN62841-2-2:2014.

These products also comply with Directive 2014/30/EU and 2011/65/EU. For more information, please contact DEWALT at the following address or refer to the back of the manual.

The undersigned is responsible for compilation of the technical file and makes this declaration on behalf of DEWALT.

Markus Rompel
Vice President of Engineering, PTE-Europe
DEWALT, Richard-Klinger-Straße 11,
65510, Idstein, Germany
07.04.2021

DECLARATION OF CONFORMITY

THE SUPPLY OF MACHINERY (SAFETY) REGULATIONS 2008

UK CA

Brushless Cordless Compact Impact Driver DCF850

DEWALT declares that these products described under "technical data" are in compliance with:

EN62841-1:2015, EN62841-2-2:2014

These products conform to the following UK Regulations

The Supply of Machinery (Safety) Regulations, 2008, S.I. 2008/1597 (as amended).

Electromagnetic Compatibility Regulations, 2016, S.I.2016/1091 (as amended).

The Restriction of the Use of Certain Hazardous Substances in Electrical and Electronic Equipment Regulations 2012, S.I. 2012/3032 (as amended).

For more information, please contact DEWALT at the following address or refer to the back of the manual.

Batteries				Chargers/Charge Times (Minutes)									
Cat #	V_{DC}	Ah	Weight (kg)	DCB104	DCB107	DCB112	DCB113	DCB115	DCB116	DCB117	DCB118	DCB132	DCB119
DCB546	18/54	6.0/2.0	1.05	60	270	170	140	90	80	40	60	90	X
DCB547	18/54	9.0/3.0	1.46	75*	420	270	220	135*	110*	60	75*	135*	X
DCB548	18/54	12.0/4.0	1.44	120	540	350	300	180	150	80	120	180	X
DCB181	18	1.5	0.35	22	70	45	35	22	22	22	22	22	45
DCB182	18	4.0	0.61	60/40**	185	120	100	60	60/45**	60/40**	60/40**	60	120
DCB183/B/G	18	2.0	0.40	30	90	60	50	30	30	30	30	30	60
DCB184/B/G	18	5.0	0.62	75/50**	240	150	120	75	75/60**	75/50**	75/50**	75	150
DCB185	18	1.3	0.35	22	60	40	30	22	22	22	22	22	40
DCB187	18	3.0	0.54	45	140	90	70	45	45	45	45	45	90
DCB189	18	4.0	0.54	60	185	120	100	60	60	60	60	60	120

**Date code 201811475B or later*
***Date code 201536 or later*

The undersigned is responsible for compilation of the technical file and makes this declaration on behalf of DEWALT.



Karl Evans
Vice President Professional Power Tools EANZ GTS
270 Bath Road, Slough
SL1 4DX
England
07.04.2021



WARNING: *To reduce the risk of injury, read the instruction manual.*

Definitions: Safety Guidelines

The definitions below describe the level of severity for each signal word. Please read the manual and pay attention to these symbols.



DANGER: *Indicates an imminently hazardous situation which, if not avoided,* ***will*** *result in* ***death or serious injury****.*



WARNING: *Indicates a potentially hazardous situation which, if not avoided,* ***could*** *result in* ***death or serious injury****.*

CAUTION: *Indicates a potentially hazardous situation which, if not avoided,* ***may*** *result in* ***minor or moderate injury****.*

NOTICE: *Indicates a practice* ***not related to personal injury*** *which, if not avoided,* ***may*** *result in* ***property damage****.*



Denotes risk of electric shock.



Denotes risk of fire.

GENERAL POWER TOOL SAFETY WARNINGS



WARNING: Read all safety warnings, instructions, illustrations and specifications provided with this power tool. *Failure to follow all instructions listed below may result in electric shock, fire and/or serious injury.*

SAVE ALL WARNINGS AND INSTRUCTIONS FOR FUTURE REFERENCE.

The term "power tool" in the warnings refers to your mains-operated (corded) power tool or battery-operated (cordless) power tool.

1) Work Area Safety

a) ***Keep work area clean and well lit.*** *Cluttered or dark areas invite accidents.*

b) ***Do not operate power tools in explosive atmospheres, such as in the presence of flammable liquids, gases or dust.*** *Power tools create sparks which may ignite the dust or fumes.*

c) ***Keep children and bystanders away while operating a power tool.*** *Distractions can cause you to lose control.*

2) Electrical Safety

a) ***Power tool plugs must match the outlet. Never modify the plug in any way. Do not use any adapter plugs with earthed (grounded) power tools.*** *Unmodified plugs and matching outlets will reduce risk of electric shock.*

b) ***Avoid body contact with earthed or grounded surfaces such as pipes, radiators, ranges and refrigerators.*** *There is an increased risk of electric shock if your body is earthed or grounded.*

c) ***Do not expose power tools to rain or wet conditions.*** *Water entering a power tool will increase the risk of electric shock.*

d) ***Do not abuse the cord. Never use the cord for carrying, pulling or unplugging the power tool. Keep cord away from heat, oil, sharp edges or moving parts.*** *Damaged or entangled cords increase the risk of electric shock.*

e) ***When operating a power tool outdoors, use an extension cord suitable for outdoor use.*** *Use of a cord suitable for outdoor use reduces the risk of electric shock.*

f) ***If operating a power tool in a damp location is unavoidable, use a residual current device (RCD) protected supply.*** *Use of an RCD reduces the risk of electric shock.*

3) Personal Safety

a) ***Stay alert, watch what you are doing and use common sense when operating a power tool. Do not use a power tool while you are tired or under the influence of drugs, alcohol or medication.*** *A moment of inattention while operating power tools may result in serious personal injury.*

b) ***Use personal protective equipment. Always wear eye protection.*** *Protective equipment such as a dust mask, non-skid safety shoes, hard hat or hearing protection used for appropriate conditions will reduce personal injuries.*

c) ***Prevent unintentional starting. Ensure the switch is in the off-position before connecting to power source and/or battery pack, picking up or carrying the tool.*** *Carrying power tools with your finger on the switch or energising power tools that have the switch on invites accidents.*

d) ***Remove any adjusting key or wrench before turning the power tool on.*** *A wrench or a key left attached to a rotating part of the power tool may result in personal injury.*

e) ***Do not overreach. Keep proper footing and balance at all times.*** *This enables better control of the power tool in unexpected situations.*

f) ***Dress properly. Do not wear loose clothing or jewellery. Keep your hair and clothing away from moving parts.*** *Loose clothes, jewellery or long hair can be caught in moving parts.*

g) ***If devices are provided for the connection of dust extraction and collection facilities, ensure these are connected and properly used.*** *Use of dust collection can reduce dust-related hazards.*

h) ***Do not let familiarity gained from frequent use of tools allow you to become complacent and ignore tool safety principles.*** *A careless action can cause severe injury within a fraction of a second.*

4) Power Tool Use and Care

a) ***Do not force the power tool. Use the correct power tool for your application.*** *The correct power tool will do the job better and safer at the rate for which it was designed.*

b) ***Do not use the power tool if the switch does not turn it on and off.*** *Any power tool that cannot be controlled with the switch is dangerous and must be repaired.*

c) ***Disconnect the plug from the power source and/or remove the battery pack, if detachable, from the power tool before making any adjustments, changing accessories, or storing power tools.*** *Such preventive safety measures reduce the risk of starting the power tool accidentally.*

d) ***Store idle power tools out of the reach of children and do not allow persons unfamiliar with the power tool or these instructions to operate the power tool.*** *Power tools are dangerous in the hands of untrained users.*

e) ***Maintain power tools and accessories. Check for misalignment or binding of moving parts, breakage of parts and any other condition that may affect the power tool's operation. If damaged, have the power tool repaired before use.*** *Many accidents are caused by poorly maintained power tools.*

f) ***Keep cutting tools sharp and clean.*** *Properly maintained cutting tools with sharp cutting edges are less likely to bind and are easier to control.*

g) ***Use the power tool, accessories and tool bits, etc. in accordance with these instructions, taking into account the working conditions and the work to be performed.*** *Use of the power tool for operations different from those intended could result in a hazardous situation.*

h) ***Keep handles and grasping surfaces dry, clean and free from oil and grease.*** *Slippery handles and grasping surfaces do not allow for safe handling and control of the tool in unexpected situations.*

5) Battery Tool Use and Care

a) ***Recharge only with the charger specified by the manufacturer.*** *A charger that is suitable for one type of battery pack may create a risk of fire when used with another battery pack.*

b) ***Use power tools only with specifically designated battery packs.*** *Use of any other battery packs may create a risk of injury and fire.*

c) ***When battery pack is not in use, keep it away from other metal objects, like paper clips, coins, keys, nails, screws or other small metal objects, that can make a connection from one terminal to another.*** *Shorting the battery terminals together may cause burns or a fire.*

d) ***Under abusive conditions, liquid may be ejected from the battery; avoid contact. If contact accidentally occurs, flush with water. If liquid contacts eyes, additionally seek medical help.*** *Liquid ejected from the battery may cause irritation or burns.*

e) ***Do not use a battery pack or tool that is damaged or modified.*** *Damaged or modified batteries may exhibit unpredictable behaviour resulting in fire, explosion or risk of injury.*

f) ***Do not expose a battery pack or tool to fire or excessive temperature.*** *Exposure to fire or temperature above 130 °C may cause explosion.*

g) ***Follow all charging instructions and do not charge the battery pack or tool outside the temperature range specified in the instructions.*** *Charging improperly or at temperatures outside the specified range may damage the battery and increase the risk of fire.*

6) Service

a) ***Have your power tool serviced by a qualified repair person using only identical replacement parts.*** *This will ensure that the safety of the power tool is maintained.*

b) ***Never service damaged battery packs.*** *Service of battery packs should only be performed by the manufacturer or authorized service providers..*

Additional Specific Safety Rules for Impact Wrenches/Drivers

- ***Hold power tool by insulated gripping surfaces when performing an operation where the fastener may contact hidden wiring.*** *Fasteners contacting a "live" wire may make exposed metal parts of the power tool "live" and could give the operator an electric shock.*

Residual Risks

In spite of the application of the relevant safety regulations and the implementation of safety devices, certain residual risks cannot be avoided. These are:

- *Impairment of hearing.*
- *Risk of personal injury due to flying particles.*
- *Risk of burns due to accessories becoming hot during operation.*
- *Risk of personal injury due to prolonged use.*

SAVE THESE INSTRUCTIONS

Chargers

DEWALT chargers require no adjustment and are designed to be as easy as possible to operate.

Electrical Safety

The electric motor has been designed for one voltage only. Always check that the battery pack voltage corresponds to the voltage on the rating plate. Also make sure that the voltage of your charger corresponds to that of your mains.

Your DEWALT charger is double insulated in accordance with EN60335; therefore no earth wire is required.

If the supply cord is damaged, it must be replaced by a specially prepared cord available through the DEWALT service organisation.

Mains Plug Replacement (U.K. & Ireland Only)

If a new mains plug needs to be fitted:

- *Safely dispose of the old plug.*
- *Connect the brown lead to the live terminal in the plug.*
- *Connect the blue lead to the neutral terminal.*

WARNING: *No connection is to be made to the earth terminal.*

Follow the fitting instructions supplied with good quality plugs. Recommended fuse: 3 A.

Using an Extension Cable

An extension cord should not be used unless absolutely necessary. Use an approved extension cable suitable for the power input of your charger (see ***Technical Data***). The minimum conductor size is 1 mm^2; the maximum length is 30 m.

When using a cable reel, always unwind the cable completely.

Important Safety Instructions for All Battery Chargers

SAVE THESE INSTRUCTIONS: This manual contains important safety and operating instructions for compatible battery chargers (refer to ***Technical Data***).

- *Before using charger, read all instructions and cautionary markings on charger, battery pack, and product using battery pack.*

WARNING: *Shock hazard. Do not allow any liquid to get inside charger. Electric shock may result.*

WARNING: *We recommend the use of a residual current device with a residual current rating of 30mA or less.*

CAUTION: *Burn hazard. To reduce the risk of injury, charge only DEWALT rechargeable batteries. Other types of batteries may burst causing personal injury and damage.*

CAUTION: *Children should be supervised to ensure that they do not play with the appliance.*

NOTICE: *Under certain conditions, with the charger plugged into the power supply, the exposed charging contacts inside the charger can be shorted by foreign material. Foreign materials of a conductive nature such as, but not limited to, steel wool, aluminum foil or any buildup of metallic particles should be kept away from charger cavities. Always unplug the charger from the power supply when there is no battery pack in the cavity. Unplug charger before attempting to clean*

- ***DO NOT attempt to charge the battery pack with any chargers other than the ones in this manual.*** *The charger and battery pack are specifically designed to work together.*
- ***These chargers are not intended for any uses other than charging DEWALT rechargeable batteries.*** *Any other uses may result in risk of fire, electric shock or electrocution.*
- ***Do not expose charger to rain or snow.***
- ***Pull by plug rather than cord when disconnecting charger.*** *This will reduce risk of damage to electric plug and cord.*
- ***Make sure that cord is located so that it will not be stepped on, tripped over, or otherwise subjected to damage or stress.***
- ***Do not use an extension cord unless it is absolutely necessary.*** *Use of improper extension cord could result in risk of fire,electric shock, or electrocution.*
- ***Do not place any object on top of charger or place the charger on a soft surface that might block the ventilation slots and result in excessive internal heat.*** *Place the charger in a position away from any heat source. The charger is ventilated through slots in the top and the bottom of the housing.*
- ***Do not operate charger with damaged cord or plug—*** *have them replaced immediately.*
- ***Do not operate charger if it has received a sharp blow, been dropped, or otherwise damaged in any way.*** *Take it to an authorised service centre.*

- ***Do not disassemble charger; take it to an authorised service centre when service or repair is required.*** *Incorrect reassembly may result in a risk of electric shock, electrocution or fire.*
- *In case of damaged power supply cord the supply cord must be replaced immediately by the manufacturer, its service agent or similar qualified person to prevent any hazard.*
- ***Disconnect the charger from the outlet before attempting any cleaning. This will reduce the risk of electric shock.*** *Removing the battery pack will not reduce this risk.*
- ***NEVER*** *attempt to connect two chargers together.*
- ***The charger is designed to operate on standard 230V household electrical power. Do not attempt to use it on any other voltage.*** *This does not apply to the vehicular charger.*

Charging a Battery (Fig. B)

1. Plug the charger into an appropriate outlet before inserting battery pack.
2. Insert the battery pack **6** into the charger, making sure the battery pack is fully seated in the charger. The red (charging) light will blink repeatedly indicating that the charging process has started.
3. The completion of charge will be indicated by the red light remaining ON continuously. The battery pack is fully charged and may be used at this time or left in the charger. To remove the battery pack from the charger, push the battery release button **5** on the battery pack.

NOTE: To ensure maximum performance and life of lithium-ion battery packs, charge the battery pack fully before first use.

Charger Operation

Refer to the indicators below for the charge status of the battery pack.

Charge Indicators	
Charging	— — — —
Fully Charged	———
Hot/Cold Pack Delay*	— — — | ———

*****The red light will continue to blink, but a yellow indicator light will be illuminated during this operation. Once the battery pack has reached an appropriate temperature, the yellow light will turn off and the charger will resume the charging procedure.

The compatible charger(s) will not charge a faulty battery pack. The charger will indicate faulty battery by refusing to light.

NOTE: This could also mean a problem with a charger.

If the charger indicates a problem, take the charger and battery pack to be tested at an authorised service centre.

Hot/Cold Pack Delay

When the charger detects a battery pack that is too hot or too cold, it automatically starts a Hot/Cold Pack Delay, suspending charging until the battery pack has reached an appropriate temperature. The charger then automatically switches to the pack charging mode. This feature ensures maximum battery pack life.

A cold battery pack will charge at a slower rate than a warm battery pack. The battery pack will charge at that slower rate throughout the entire charging cycle and will not return to maximum charge rate even if the battery pack warms.

The DCB118 charger is equipped with an internal fan designed to cool the battery pack. The fan will turn on automatically when the battery pack needs to be cooled. Never operate the charger if the fan does not operate properly or if ventilation slots are blocked. Do not permit foreign objects to enter the interior of the charger.

Electronic Protection System

XR Li-Ion tools are designed with an Electronic Protection System that will protect the battery pack against overloading, overheating or deep discharge.

The tool will automatically turn off if the Electronic Protection System engages. If this occurs, place the lithium-ion battery pack on the charger until it is fully charged.

Wall Mounting

These chargers are designed to be wall mountable or to sit upright on a table or work surface. If wall mounting, locate the charger within reach of an electrical outlet, and away from a corner or other obstructions which may impede air flow. Use the back of the charger as a template for the location of the mounting screws on the wall. Mount the charger securely using drywall screws (purchased separately) at least 25.4 mm long with a screw head diameter of 7–9 mm, screwed into wood to an optimal depth leaving approximately 5.5 mm of the screw exposed. Align the slots on the back of the charger with the exposed screws and fully engage them in the slots.

Charger Cleaning Instructions

WARNING: Shock hazard. Disconnect the charger from the AC outlet before cleaning*. Dirt and grease may be removed from the exterior of the charger using a cloth or soft non-metallic brush. Do not use water or any cleaning solutions. Never let any liquid get inside the tool; never immerse any part of the tool into a liquid.*

Battery Packs

Important Safety Instructions for All Battery Packs

When ordering replacement battery packs, be sure to include catalogue number and voltage.

The battery pack is not fully charged out of the carton. Before using the battery pack and charger, read the safety instructions below. Then follow charging procedures outlined.

READ ALL INSTRUCTIONS

- ***Do not charge or use battery in explosive atmospheres, such as in the presence of flammable liquids, gases or dust.*** *Inserting or removing the battery from the charger may ignite the dust or fumes.*
- ***Never force battery pack into charger. Do not modify battery pack in any way to fit into a non-compatible***

charger as battery pack may rupture causing serious personal injury.

- *Charge the battery packs only in DEWALT chargers.*
- ***DO NOT** splash or immerse in water or other liquids.*
- ***Do not store or use the tool and battery pack in locations where the temperature may reach or exceed 40 ˚C (104 ˚F) (such as outside sheds or metal buildings in summer).***
- ***Do not incinerate the battery pack even if it is severely damaged or is completely worn out.** The battery pack can explode in a fire. Toxic fumes and materials are created when lithium-ion battery packs are burned.*
- ***If battery contents come into contact with the skin, immediately wash area with mild soap and water.** If battery liquid gets into the eye, rinse water over the open eye for 15 minutes or until irritation ceases. If medical attention is needed, the battery electrolyte is composed of a mixture of liquid organic carbonates and lithium salts.*
- ***Contents of opened battery cells may cause respiratory irritation.** Provide fresh air. If symptoms persists, seek medical attention.*

***WARNING:** Burn hazard. Battery liquid may be flammable if exposed to spark or flame.*

***WARNING:** Never attempt to open the battery pack for any reason. If battery pack case is cracked or damaged, do not insert into charger. Do not crush, drop or damage battery pack. Do not use a battery pack or charger that has received a sharp blow, been dropped, run over or damaged in any way (i.e., pierced with a nail, hit with a hammer, stepped on). Electric shock or electrocution may result. Damaged battery packs should be returned to service centre for recycling.*

***WARNING: Fire hazard. Do not store or carry the battery pack so that metal objects can contact exposed battery terminals.** For example, do not place the battery pack in aprons, pockets, tool boxes, product kit boxes, drawers, etc., with loose nails, screws, keys, etc.*

***CAUTION: When not in use, place tool on its side on a stable surface where it will not cause a tripping or falling hazard.** Some tools with large battery packs will stand upright on the battery pack but may be easily knocked over.*

Transportation

***WARNING: Fire hazard.** Transporting batteries can possibly cause fire if the battery terminals inadvertently come in contact with conductive materials. When transporting batteries, make sure that the battery terminals are protected and well insulated from materials that could contact them and cause a short circuit.*

DEWALT batteries comply with all applicable shipping regulations as prescribed by industry and legal standards which include UN Recommendations on the Transport of Dangerous Goods; International Air Transport Association (IATA) Dangerous Goods Regulations, International Maritime Dangerous Goods (IMDG) Regulations, and the European Agreement Concerning The International Carriage of Dangerous Goods by Road (ADR). Lithium-ion cells and batteries have been tested to section 38.3 of the UN Recommendations on the Transport of Dangerous Goods Manual of Tests and Criteria.

In most instances, shipping a DEWALT battery pack will be excepted from being classified as a fully regulated Class 9 Hazardous Material. In general, only shipments containing a lithium-ion battery with an energy rating greater than 100 Watt Hours (Wh) will require being shipped as fully regulated Class 9. All lithium-ion batteries have the Watt Hour rating marked on the pack. Furthermore, due to regulation complexities, DEWALT does not recommend air shipping lithium-ion battery packs alone regardless of Watt Hour rating. Shipments of tools with batteries (combo kits) can be air shipped as excepted if the Watt Hour rating of the battery pack is no greater than 100 Whr.

Regardless of whether a shipment is considered excepted or fully regulated, it is the shipper's responsibility to consult the latest regulations for packaging, labeling/marking and documentation requirements.

The information provided in this section of the manual is provided in good faith and believed to be accurate at the time the document was created. However, no warranty, expressed or implied, is given. It is the buyer's responsibility to ensure that its activities comply with the applicable regulations.

Transporting the FLEXVOLT™ Battery

The DEWALT FLEXVOLT™ battery has two modes: **Use** and **Transport**.

Use Mode: When the FLEXVOLT™ battery stands alone or is in a DEWALT 18V product, it will operate as an 18V battery. When the FLEXVOLT™ battery is in a 54V or a 108V (two 54V batteries) product, it will operate as a 54V battery.

Transport Mode: When the cap is attached to the FLEXVOLT™ battery, the battery is in Transport mode. Keep the cap for shipping.

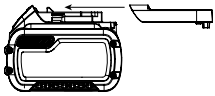

When in Transport mode, strings of cells are electrically disconnected within the pack resulting in 3 batteries with a lower Watt hour (Wh) rating as compared to 1 battery with a higher Watt hour rating. This increased quantity of 3 batteries with the lower Watt hour rating can exempt the pack from certain shipping regulations that are imposed upon the higher Watt hour batteries.

For example, the Transport Wh rating might indicate 3 x 36 Wh, meaning 3 batteries of 36 Wh each. The Use Wh rating might indicate 108 Wh (1 battery implied).

Example of Use and Transport Label Marking



Storage Recommendations

1. The best storage place is one that is cool and dry away from direct sunlight and excess heat or cold. For optimum battery performance and life, store battery packs at room temperature when not in use.

2. For long storage, it is recommended to store a fully charged battery pack in a cool, dry place out of the charger for optimal results.

NOTE: Battery packs should not be stored completely depleted of charge. The battery pack will need to be recharged before use.

Labels on Charger and Battery Pack

In addition to the pictographs used in this manual, the labels on the charger and the battery pack may show the following pictographs:



Read instruction manual before use.



See ***Technical Data*** for charging time.



Do not probe with conductive objects.



Do not charge damaged battery packs.



Do not expose to water.



Have defective cords replaced immediately.



Charge only between 4 ˚C and 40 ˚C.



Only for indoor use.



Discard the battery pack with due care for the environment.



Charge DEWALT battery packs only with designated DEWALT chargers. Charging battery packs other than the designated DEWALT batteries with a DEWALT charger may make them burst or lead to other dangerous situations.



Do not incinerate the battery pack.



USE (without transport cap). Example: Wh rating indicates 108 Wh (1 battery with 108 Wh).



TRANSPORT (with built-in transport cap). Example: Wh rating indicates 3 x 36 Wh (3 batteries of 36 Wh).

Battery Type

The DCF850 operates on an 18 volt battery pack.

These battery packs may be used: DCB181, DCB182, DCB183, DCB183B, DCB184, DCB184B, DCB185, DCB187, DCB189, DCB546, DCB547, DCB548. Refer to ***Technical Data*** for more information.

Package Contents

The package contains:

1 Impact driver
1 Charger
1 Li-Ion battery pack (C1, D1, L1, M1, P1, S1, T1, X1, Y1 models)
2 Li-Ion battery packs (C2, D2, L2, M2, P2, S2, T2, X2, Y2 models)
3 Li-Ion battery packs (C3, D3, L3, M3, P3, S3, T3, X3, Y3 models)
1 Magnetic bit holder
1 Belt hook
1 Kitbox
1 Instruction manual
1 Tool Connect™ App instruction manual (B models)

NOTE: Battery packs, chargers and kitboxes are not included with N-models.

- *Check for damage to the tool, parts or accessories which may have occurred during transport.*
- *Take the time to thoroughly read and understand this manual prior to operation.*

Markings on Tool

The following pictograms are shown on the tool:



Read instruction manual before use.



Visible radiation. Do not stare into light.

Date Code Position (Fig. B)

The date code **14**, which also includes the year of manufacture, is printed into the housing.

Example:

2019 XX XX
Year of Manufacture

Description (Fig. A)

WARNING: *Never modify the power tool or any part of it. Damage or personal injury could result.*

1 Trigger switch
2 Forward/reverse control button
3 Chuck collar
4 6.35 mm hex chuck
5 Battery release button
6 Battery pack
7 Worklights
8 Belt hook (optional accessory)
9 Mounting screw
10 Main handle
11 Mode selector
12 Magnetic bit holder

Intended Use

This impact driver is designed for professional impact screwdriving applications. The impact function makes this tool particularly useful for driving fasteners in wood, metal and concrete.

DO NOT use under wet conditions or in the presence of flammable liquids or gases.

This impact driver is a professional power tool.

DO NOT let children come into contact with the tool. Supervision is required when inexperienced operators use this tool.

- **Young children and the infirm.** This appliance is not intended for use by young children or infirm persons without supervision.
- This product is not intended for use by persons (including children) suffering from diminished physical, sensory or mental abilities; lack of experience, knowledge or skills unless they are supervised by a person responsible for their safety. Children should never be left alone with this product.

ASSEMBLY AND ADJUSTMENTS

WARNING: To reduce the risk of serious personal injury, turn tool off and disconnect battery pack before making any adjustments or removing/ installing attachments or accessories. *An accidental start-up can cause injury.*

WARNING: *Use only DEWALT battery packs and chargers.*

Inserting and Removing the Battery Pack from the Tool (Fig. B)

NOTE: Make sure your battery pack **6** is fully charged.

To Install the Battery Pack into the Tool Handle

1. Align the battery pack **6** with the rails inside the tool's handle (Fig. B).
2. Slide it into the handle until the battery pack is firmly seated in the tool and ensure that you hear the lock snap into place.

To Remove the Battery Pack from the Tool

1. Press the release button **5** and firmly pull the battery pack out of the tool handle.
2. Insert battery pack into the charger as described in the charger section of this manual.

Fuel Gauge Battery Packs (Fig. B)

Some DEWALT battery packs include a fuel gauge which consists of three green LED lights that indicate the level of charge remaining in the battery pack.

To actuate the fuel gauge, press and hold the fuel gauge button **13**. A combination of the three green LED lights will illuminate designating the level of charge left. When the level of charge in the battery is below the usable limit, the fuel gauge will not illuminate and the battery will need to be recharged.

NOTE: The fuel gauge is only an indication of the charge left on the battery pack. It does not indicate tool functionality and is subject to variation based on product components, temperature and end-user application.

Belt Hook and Magnetic Bit Holder (Fig. A)

WARNING: To reduce the risk of serious personal injury, turn tool off and disconnect battery pack before making any adjustments or removing/ installing attachments or accessories.

WARNING: To reduce the risk of serious personal injury, DO NOT *suspend tool overhead or suspend objects from the belt hook.* ***ONLY*** *hang tool's belt hook from a work belt.*

WARNING: To reduce the risk of serious personal injury, *ensure the screw holding the belt hook is secure.*

IMPORTANT: When attaching or replacing the belt hook or magnetic bit holder, use only the screw **9** that is provided. Be sure to securely tighten the screw.

The belt hook **8** and magnetic bit holder **12** can be attached to either side of the tool using only the screw **9** provided, to accommodate left- or right- handed users. If the hook or magnetic bit holder is not desired at all, it can be removed from the tool.

To move belt hook or magnetic bit holder, remove the screw **9** that holds it in place then reassemble on the opposite side. Be sure to securely tighten the screw.

OPERATION

Instructions for Use

WARNING: *Always observe the safety instructions and applicable regulations.*

WARNING: To reduce the risk of serious personal injury, turn tool off and disconnect battery pack before making any adjustments or removing/ installing attachments or accessories. *An accidental start-up can cause injury.*

Proper Hand Position (Fig. A, C)

WARNING: *To reduce the risk of serious personal injury,* ***ALWAYS*** *use proper hand position as shown.*

WARNING: *To reduce the risk of serious personal injury,* ***ALWAYS*** *hold securely in anticipation of a sudden reaction.*

Proper hand position requires one hand on the main handle **10**.

Variable Speed Trigger Switch (Fig. A)

To turn the tool on, squeeze the trigger switch **1**. To turn the tool off, release the trigger switch. Your tool is equipped with a brake. The tool will stop when the trigger switch is fully released.

The variable speed switch enables you to start the application at a slow speed. The further you squeeze the trigger, the faster the tool will operate. For maximum tool life, use variable speed only for starting holes or fasteners.

NOTE: Continuous use in variable speed range is not recommended. It may damage the switch and should be avoided.

Forward/Reverse Control Button (Fig. A)

A forward/reverse control button **2** determines the direction of the tool and also serves as a lock-off button.

To select forward rotation, release the trigger switch **1** and depress the forward/reverse control button **2** on the right side of the tool.

To select reverse, release the trigger switch **1** and depress the forward/reverse control button **2** on the left side of the

tool. The centre position of the control button locks the trigger switch in the off position. When changing the position of the control button, be sure the trigger is released.

NOTE: The first time the tool is run after changing the direction of rotation, you may hear a click on start up. This is normal and does not indicate a problem.

Worklights (Fig. A)

There are three worklights 7 located around the 6.35 mm hex chuck 4. The worklights are activated when the trigger switch is depressed.

When the trigger is released, the worklight will stay illuminated for up to 20 seconds.

NOTE: The worklights are for lighting the immediate work surface and are not intended to be used as a flashlight.

Mode Selector (Fig. A, D)

Your tool is equipped with a mode selector 11 which allows you to select one of three modes. Select the mode based on the application and control the speed of the tool using the variable speed trigger switch 1.

Precision Drive (Fig. D)

In addition to normal impacting modes, this tool features the Precision Drive mode which enables greater control in lighter applications to avoid damage to materials or fasteners. It is ideal for light applications such as cabinet hinge screws or machine screws. Precision Drive mode will work as a screwdriver in light applications, before hesitating as the screw head reaches the work piece, and then (if required) start a slow controlled impact to ensure the head ends perfectly flush.

NOTE: This mode is for light duty screwdriving applications. If the tool will not drive a fastener in Precision Mode, please select mode 2 which will give the additional power required.

DCF850			
Mode 1	Precision Drive	rpm	0–1000
Mode 2	Normal Impacting	rpm	0–2800
Mode 3	High Speed Impacting	rpm	0–3250

Quick-Release Chuck (Fig. A, E, F)

WARNING: *Use only impact accessories. Non-impact accessories may break and cause a hazardous condition. Inspect accessory prior to use to ensure that it contains no cracks.*

NOTE: The chuck accepts 6.35 mm hex accessories only.

Place the forward/reverse button 2 in the lock-off (centre) position or remove battery pack before changing accessories.

To install an accessory, fully insert the accessory. The accessory is locked into place (Fig. E).

To remove an accessory, pull the chuck collar 3 away from the front of the tool. Remove the accessory (Fig. F).

Usage

Your impact tool generates the following maximum torque:

Cat #	Nm
DCF850	206.2

CAUTION: *Ensure fastener and/or system will withstand the level of torque generated by the tool. Excessive torque may cause breakage and possible personal injury.*

1. Place the accessory into the chuck. Keep the tool pointed straight at the work piece.
2. Press switch to start operation. Release the switch to stop operation. Always check torque with a torque wrench, as the fastening torque is affected by many factors including the following:
   - Voltage: Low voltage, due to a nearly discharged battery, will reduce fastening torque.
   - Socket size: Failure to use the correct socket size will cause a reduction in fastening torque.
   - Bolt Size: Larger bolt diameters generally require higher fastening torque. Fastening torque will also vary according to length, grade, and torque coefficient.
   - Bolt: Ensure that all threads are free of rust and other debris to allow proper fastening torque.
   - Material: The type of material and surface finish of the material will affect fastening torque.
   - Fastening Time: Longer fastening time results in increased fastening torque. Using a longer fastening time than recommended could cause the fasteners to be overstressed, stripped or damaged.

MAINTENANCE

Your DEWALT power tool has been designed to operate over a long period of time with a minimum of maintenance. Continuous satisfactory operation depends upon proper tool care and regular cleaning.

WARNING: To reduce the risk of serious personal injury, turn tool off and disconnect battery pack before making any adjustments or removing/ installing attachments or accessories. *An accidental start-up can cause injury.*

The charger and battery pack are not serviceable.

Lubrication

Your power tool requires no additional lubrication.

Cleaning

WARNING: *Blow dirt and dust out of the main housing with dry air as often as dirt is seen collecting in and around the air vents. Wear approved eye protection and approved dust mask when performing this procedure.*

WARNING: *Never use solvents or other harsh chemicals for cleaning the non-metallic parts of the tool. These chemicals may weaken the materials used in these parts. Use a cloth dampened only with water and mild soap.*

Never let any liquid get inside the tool; never immerse any part of the tool into a liquid.

Optional Accessories

WARNING: *Since accessories, other than those offered by DEWALT, have not been tested with this product, use of such accessories with this tool could be hazardous. To reduce the risk of injury, only DEWALT recommended accessories should be used with this product.*

WARNING: *Use only impact accessories. Non-impact accessories may break and cause a hazardous condition. Inspect accessories prior to use to ensure that they contain no cracks.*

Consult your dealer for further information on the appropriate accessories.

Protecting the Environment

Separate collection. Products and batteries marked with this symbol must not be disposed of with normal household waste.

Products and batteries contain materials that can be recovered or recycled reducing the demand for raw materials. Please recycle electrical products and batteries according to local provisions. Further information is available at **www.2helpU.com**.

Rechargeable Battery Pack

This long life battery pack must be recharged when it fails to produce sufficient power on jobs which were easily done before. At the end of its technical life, discard it with due care for our environment:

- Run the battery pack down completely, then remove it from the tool.
- Li-Ion cells are recyclable. Take them to your dealer or a local recycling station. The collected battery packs will be recycled or disposed of properly.

Belgique et Luxembourg België en Luxemburg	DEWALT - Belgium BVBA Egide Walschaertsstraat 16 2800 Mechelen	Tel: NL 32 15 47 37 63 Tel: FR 32 15 47 37 64 Fax: 32 15 47 37 99	www.dewalt.be enduser.BE@SBDinc.com
Danmark	DEWALT (Stanley Black&Decker AS) Roskildevej 22 2620 Albertslund	Tel: 70 20 15 10 Fax: 70 22 49 10	www.dewalt.dk kundeservice.dk@sbdinc.com
Deutschland	DEWALT Richard Klinger Str. 11 65510 Idstein	Tel: 06126-21-0 Fax: 06126-21-2770	www.dewalt.de infodwge@sbdinc.com
Ελλάς	DEWALT (Ελλάς) A.E. ΕΔΡΑ-ΓΡΑΦΕΙΑ : Στράβωνος 7 & Λ. Βουλιαγμένης, Γλυφάδα 166 74, Αθήνα SERVICE : Ημερος Τόπος 2 (Χάνι Αδάμ) – 193 00 Ασπρόπυργος	Τηλ: 003021089816 16 Φαξ: 003021089835 70	www.dewalt.gr Greece.Service@sbdinc.com
España	DEWALT Ibérica, S.C.A. Parc de Negocios "Mas Blau" Edificio Muntadas, c/Bergadá, 1, Of. A6 08820 El Prat de Llobregat (Barcelona)	Tel: 934 797 400 Fax: 934 797 419	www.dewalt.es respuesta.postventa@sbdinc.com
France	DEWALT (Stanley Black & Decker France SAS) 62 Chemin de la Bruyère CS 60105, 69574 DARDILLY Cedex	Tel: 04 72 20 39 20 Fax: 04 72 20 39 00	www.dewalt.fr scufr@sbdinc.com
Schweiz Suisse Svizzera	DEWALT In der Luberzen 42 8902 Urdorf	Tel: 044 - 755 60 70 Fax: 044 - 730 70 67	www.dewalt.ch service@rofoag.ch
Ireland	DEWALT Building 4500, Kinsale Road Cork Airport Business Park Cork, Ireland	Tel: 00353-2781800 Fax: 01278 1811	www.dewalt.ie Sales.ireland@sbdinc.com
Italia	DEWALT via Energypark 6 20871 Vimercate (MB), IT	Tel: 800-014353 39 039-9590200 Fax: 39 039-9590311	www.dewalt.it
Nederlands	DEWALT Netherlands BVPostbus 83, 6120 AB BORN	Tel: 31 164 283 063 Fax: 31 164 283 200	www.dewalt.nl
Norge	DEWALT Postboks 4613 0405 Oslo, Norge	Tel: 45 25 13 00 Fax: 45 25 08 00	www.dewalt.no kundeservice.no@sbdinc.com
Österreich	DEWALT Werkzeug Vertriebsges m.b.H Oberlaaerstrasse 248, A-1230 Wien	Tel: 01 - 66116 - 0 Fax: 01 - 66116 - 614	www.dewalt.at service.austria@sbdinc.com
Portugal	DEWALT Ed. D Dinis, Quina da Fonte Rua dos Malhoes 2 2A 2º Esq. Oeiras e S. Juliao da Barra, paço de Arcos e Caxias 2770 071 Paço de Arcos	Tel: +351 214667500 Fax: +351214667580	www.dewalt.pt resposta.posvenda@sbdinc.com
Suomi	DEWALT PL47 00521 Helsinki, Suomi	Puh: 010 400 4333 Faksi: 0800 411 340	www.dewalt.fi asiakaspalvelu.fi@sbdinc.com
Sverige	DEWALT BOX 94 43122 Mölndal Sverige	Tel: 031 68 61 60 Fax: 031 68 60 08	www.dewalt.se kundservice.se@sbdinc.com
Türkiye	Sanayi ve Ticareet Bakanlığı tebliğince kullanim ömrü 7 yıldır. Stanley Black & Decker Turkey Alet Üretim San. Tic. Ltd.Şti. AND Kozyatağı - İçerenköy Mah. Umut Sok. AND Ofis Sit. No: 10-12 / 82-83-84 Ataşehir/İstanbul, Türkiye	Tel: +90 216 665 2900 Faks: +90 216 665 2901	www.dewalt.com.tr support@dewalt.com.tr
United Kingdom	DEWALT, 270 Bath Road; Slough, Berks SL1 4DX	Tel: 01753-567055 Fax: 01753-572112	www.dewalt.co.uk emeaservice@sbdinc.com
Australia	DEWALT 810 Whitehorse Road Box Hill VIC 3128 Australia	Tel: Aust 1800 338 002 Tel: NZ 0800 339 258	www.dewalt.com.au www.dewalt.co.nz
Middle East Africa	DEWALT P.O. Box - 17164, Jebel Ali Free Zone (South), Dubai, UAE	Tel: 971 4 812 7400 Fax: 971 4 2822765	www.dewalt.ae support@dewalt.ae