Fig. A

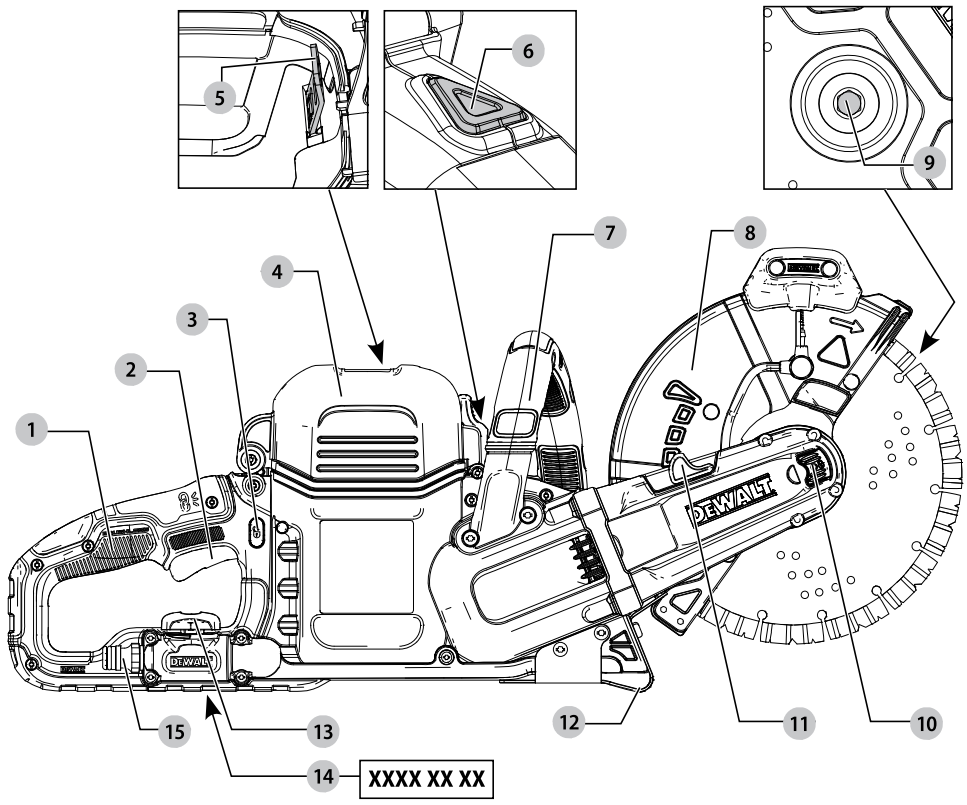

Fig. B

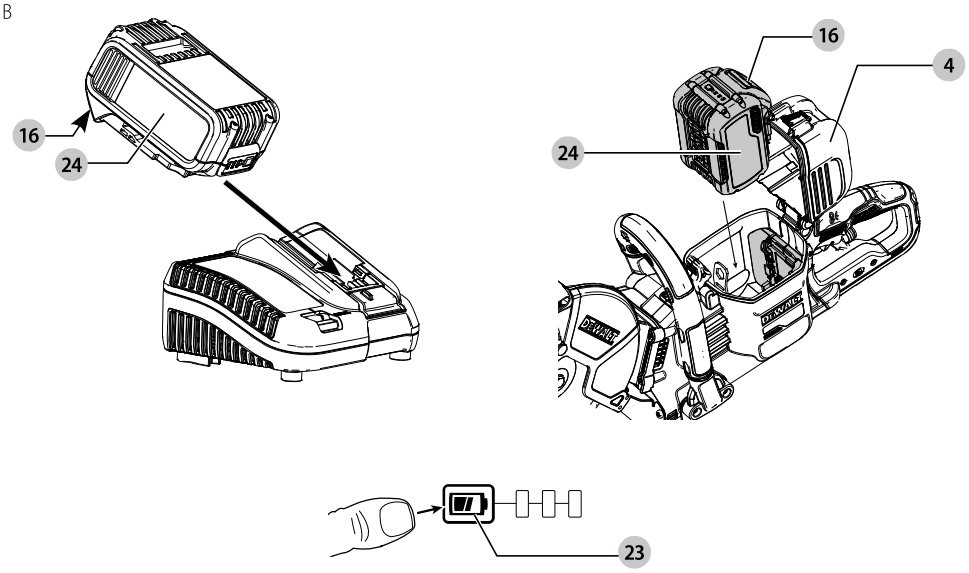

Fig. C

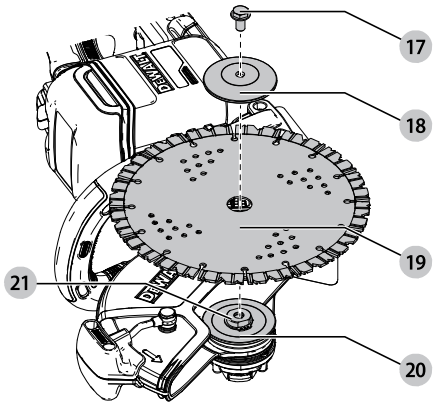

Fig. D

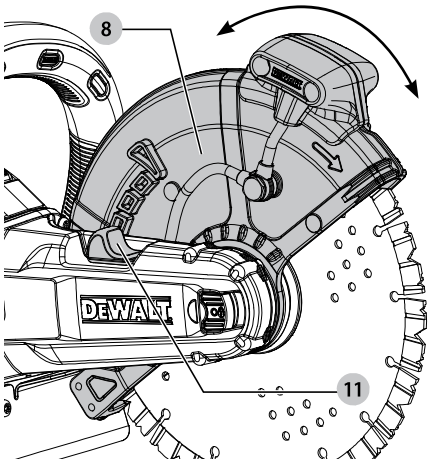

Fig. E

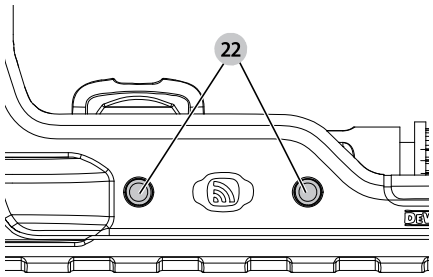

Fig. F

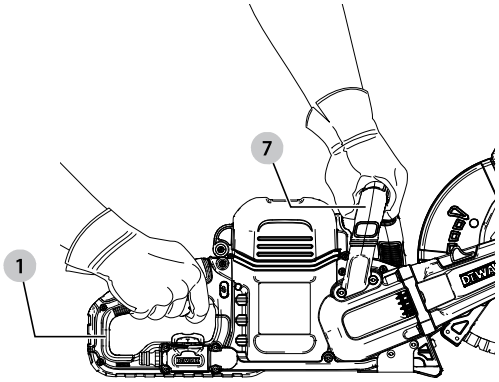

Fig. G

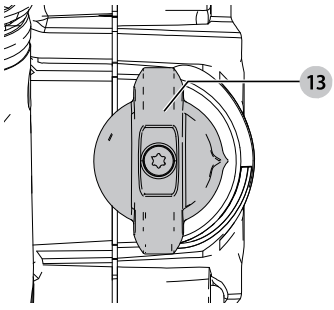

Fig. H

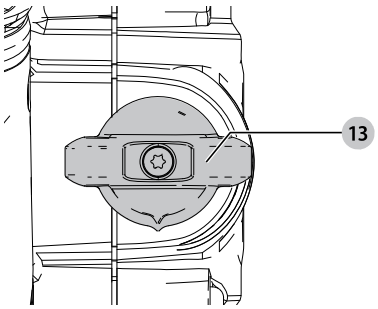

AFSTIKKERVÆRKTØJ
DCS691

Tillykke!

Du har valgt et DEWALT-værktøj. Mange års erfaring, ihærdig produktudvikling og innovation gør DEWALT én af de mest pålidelige partnere for professionelle brugere af elværktøj.

Tekniske Data

		DCS691
Spænding	V_{DC}	54
Type		1
Batteritype		Li-Ion
Hjuldiameter	mm	230
Hjuludboring	mm	22,2
Tomgangshastighed/nominel hastighed	min^{-1}	6600
Hjulperimetertykkelse (maks.)		
Metal	mm	3,6
Resinforbundet	mm	3,6
Gevindstørrelse		M8
Hurtig vandkonnektor	mm	12,5
Sender til trådløs værktøjskontrol		
Frekvensbånd	MHz	433
Maks. effekt (EIRP)	mW	0,03
Vægt (uden batteripakke)	kg	5,7

Støjværdier og vibrationsværdier under belastning (triax vektor-sum) i overensstemmelse med EN60745-2-22:		
L_{PA} (emissions lydtryksniveau)	dB(A)	105
L_{WA} (lydtryksniveau)	dB(A)	116
K (usikkerhed for det angivne lydniveau)	dB(A)	3,0

Vibrationsemissionsværdi a_h =	m/s^2	5,0
Usikkerhed K =	m/s^2	1,5

Vibrations- og/eller støjemissionsniveauet, der er angivet i dette vejledningsark, er målt i overensstemmelse med en standardiseret test, der er angivet i EN60745 og kan anvendes til at sammenligne et værktøj med et andet. Det kan anvendes til en foreløbig eksponeringsvurdering.

ADVARSEL: *Det angivne vibrations- og/eller støjemissionsniveau repræsenterer værktøjets hovedanvendelsesområder. Hvis værktøjet anvendes til andre formål, med andet tilbehør eller vedligeholdes dårligt, kan vibrations- og/eller støjemissionen imidlertid variere. Det kan markant forøge eksponeringsniveauet over den samlede arbejdsperiode.*

Et estimat af eksponeringsniveauet for vibration og/eller støj bør også tage højde for de gange, hvor der slukkes for værktøjet, eller når det kører, men ikke bruges til arbejde. Det kan markant mindske eksponeringsniveauet over den samlede arbejdsperiode.

Identificer yderligere sikkerhedsforanstaltninger for at beskytte operatøren mod virkningerne af vibrationer og/eller støj, såsom: Vedligehold værktøjet og tilbehør, hold hænderne varme (relevante for vibrationer), organisering af arbejdsmønstre.

EF-Konformitetserklæring

Maskindirektivet og radioudstyrsdirektivet

CE

Afstikkerværktøj
DCS691

DEWALT erklærer, at produkterne beskrevet under ***Tekniske data*** er udformet i overensstemmelse med:
2006/42/EF, EN60745-1:2009+A11:2010,
EN60745-2-22:2011+A11:2013.

Disse produkter overholder også direktivet 2014/30/EU og 2011/65/EU. Kontakt DEWALT på følgende adresse for yderligere oplysninger eller se bagsiden af manualen.

Undertegnede er ansvarlig for kompilering af den tekniske fil og udsteder denne erklæring på vegne af DEWALT.



Markus Rompel
Direktør for maskinteknik
DEWALT, Richard-Klinger-Strase 11,
D-65510, Idstein, Tyskland
15.03.2022

ADVARSEL: *Læs instruktionsvejledningen for at reducere risikoen for personskader.*

Definitioner: sikkerhedsretningslinjer

Nedenstående definitioner beskriver sikkerhedsniveauet for hvert enkelt signalord. Læs vejledningen og vær opmærksom på disse symboler.

FARE: *Angiver en umiddelbart farlig situation, der medmindre den undgås,* ***vil*** *resultere i* ***død eller alvorlig personskade****.*

ADVARSEL: *Angiver en potentielt farlig situation, der medmindre den undgås,* ***kunne*** *resultere i* ***død eller alvorlig personskade****.*

FORSIGTIG: *Angiver en potentielt farlig situation, der medmindre den undgås,* ***kan*** *resultere i* ***mindre eller moderat personskade****.*

BEMÆRK: *Angiver en handling, der* ***ikke er forbundet med personskade****, men som* ***kan*** *resultere i* ***produktskade****.*

Angiver risiko for elektrisk stød.

Angiver brandfare.

CUT-OFF TOOL
DCS691

Congratulations!

You have chosen a DEWALT tool. Years of experience, thorough product development and innovation make DEWALT one of the most reliable partners for professional power tool users.

Technical Data

		DCS691
Voltage	V_{DC}	54
Type		1
Battery type		Li-Ion
Wheel diameter	mm	230
Wheel bore	mm	22.2
No load/rated speed	min^{-1}	6600
Wheel perimeter thickness (max.)		
Metal	mm	3.6
Resin-bonded	mm	3.6
Thread size		M8
Water quick connector	mm	12.5
Wireless Tool Control Transmitter		
Frequency Band	MHz	433
Max. Power (EIRP)	mW	0.03
Weight (without battery pack)	kg	5.7

Noise values and vibration values under load (triax vector sum) according to EN60745-2-22:		
L_{PA} (emission sound pressure level)	dB(A)	105
L_{WA} (sound power level)	dB(A)	116
K (uncertainty for the given sound level)	dB(A)	3.0

Vibration emission value a_h =	m/s^2	5.0
Uncertainty K =	m/s^2	1.5

The vibration and/or noise emission level given in this information sheet has been measured in accordance with a standardised test given in EN60745 and may be used to compare one tool with another. It may be used for a preliminary assessment of exposure.

WARNING: *The declared vibration and/or noise emission level represents the main applications of the tool. However if the tool is used for different applications, with different accessories or poorly maintained, the vibration and/or noise emission may differ. This may significantly increase the exposure level over the total working period.*

An estimation of the level of exposure to vibration and/or noise should also take into account the times when the tool is switched off or when it is running but not actually doing the job. This may significantly reduce the exposure level over the total working period.

Identify additional safety measures to protect the operator from the effects of vibration and/or noise such as: maintain the tool and the accessories, keep the hands warm (relevant for vibration), organisation of work patterns.

EC-Declaration of Conformity

Machinery Directive and Radio Equipment Directive

CE

Cut-Off Tool
DCS691

DEWALT declares that these products described under ***Technical Data*** are in compliance with:
2006/42/EC, EN60745-1:2009+A11:2010, EN60745-2-22:2011+A11:2013.

These products also comply with Directive 2014/30/EU, 2014/53/EU and 2011/65/EU. For more information, please contact DEWALT at the following address or refer to the back of the manual.

The undersigned is responsible for compilation of the technical file and makes this declaration on behalf of DEWALT.



Markus Rompel
Director Engineering
DEWALT, Richard-Klinger-Straße 11,
65510, Idstein, Germany
15.03.2022

WARNING: *To reduce the risk of injury, read the instruction manual.*

DECLARATION OF CONFORMITY THE SUPPLY OF MACHINERY (SAFETY) REGULATIONS 2008 AND RADIO EQUIPMENT REGULATION 2017

UK CA

Cut-Off Tool
DCS691

DEWALT declares that these products described under ***Technical Data*** are in compliance with:

The Supply of Machinery (Safety) Regulations, 2008, S.I. 2008/1597 (as amended),

Batteries				Chargers/Charge Times (Minutes)**								
Cat #	V_{DC}	Ah	Weight (kg)	DCB104	DCB107	DCB112	DCB113	DCB115	DCB116	DCB117	DCB118	DCB132
DCB546	18/54	6.0/2.0	1.08	60	270	170	140	90	80	40	60	90
DCB547	18/54	9.0/3.0	1.46	75*	420	270	220	135*	110*	60	75*	135*
DCB548	18/54	12.0/4.0	1.46	120	540	350	300	180	150	80	120	180
DCB549	18/54	15.0/5.0	2.12	125	730	450	380	230	170	90	125	230

**Date code 201811475B or later*

EN60745-1:2009+A11:2010, EN60745-2-22:2011+A11:2013.

These products conform to the following UK Regulations:

Electromagnetic Compatibility Regulations, 2016, S.I.2016/1091 (as amended).

The Restriction of the Use of Certain Hazardous Substances in Electrical and Electronic Equipment Regulations 2012, S.I. 2012/3032 (as amended).

For more information, please contact DEWALT at the following address or refer to the back of the manual.

The undersigned is responsible for compilation of the technical file and makes this declaration on behalf of DEWALT.

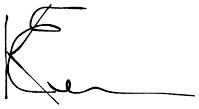

Karl Evans
Vice President Professional Power Tools EANZ GTS
DEWALT UK, 270 Bath Road, Slough
SL1 4DX
England
15.03.2022



WARNING: *To reduce the risk of injury, read the instruction manual.*

Definitions: Safety Guidelines

The definitions below describe the level of severity for each signal word. Please read the manual and pay attention to these symbols.



DANGER: *Indicates an imminently hazardous situation which, if not avoided,* ***will*** *result in* ***death or serious injury****.*



WARNING: *Indicates a potentially hazardous situation which, if not avoided,* ***could*** *result in* ***death or serious injury****.*



CAUTION: *Indicates a potentially hazardous situation which, if not avoided,* ***may*** *result in* ***minor or moderate injury****.*

NOTICE: *Indicates a practice* ***not related to personal injury*** *which, if not avoided,* ***may*** *result in* ***property damage****.*



Denotes risk of electric shock.



Denotes risk of fire.

GENERAL POWER TOOL SAFETY WARNINGS



WARNING: Read all safety warnings, instructions, illustrations and specifications provided with this power tool. *Failure to follow all instructions listed below may result in electric shock, fire and/or serious injury.*

SAVE ALL WARNINGS AND INSTRUCTIONS FOR FUTURE REFERENCE

The term "power tool" in the warnings refers to your mains-operated (corded) power tool or battery-operated (cordless) power tool.

1) Work Area Safety

a) ***Keep work area clean and well lit.*** *Cluttered or dark areas invite accidents.*

b) ***Do not operate power tools in explosive atmospheres, such as in the presence of flammable liquids, gases or dust.*** *Power tools create sparks which may ignite the dust or fumes.*

c) ***Keep children and bystanders away while operating a power tool.*** *Distractions can cause you to lose control.*

2) Electrical Safety

a) ***Power tool plugs must match the outlet. Never modify the plug in any way. Do not use any adapter plugs with earthed (grounded) power tools.*** *Unmodified plugs and matching outlets will reduce risk of electric shock.*

b) ***Avoid body contact with earthed or grounded surfaces, such as pipes, radiators, ranges and refrigerators.*** *There is an increased risk of electric shock if your body is earthed or grounded.*

c) ***Do not expose power tools to rain or wet conditions.*** *Water entering a power tool will increase the risk of electric shock.*

d) ***Do not abuse the cord. Never use the cord for carrying, pulling or unplugging the power tool. Keep cord away from heat, oil, sharp edges or moving parts.*** *Damaged or entangled cords increase the risk of electric shock.*

e) ***When operating a power tool outdoors, use an extension cord suitable for outdoor use.*** *Use of a cord suitable for outdoor use reduces the risk of electric shock.*

f) ***If operating a power tool in a damp location is unavoidable, use a residual current device (RCD) protected supply.*** *Use of an RCD reduces the risk of electric shock.*

3) Personal Safety

a) ***Stay alert, watch what you are doing and use common sense when operating a power tool. Do not use a power tool while you are tired or under the influence of drugs, alcohol or medication.*** *A moment of inattention while operating power tools may result in serious personal injury.*

b) ***Use personal protective equipment. Always wear eye protection.*** *Protective equipment such as a dust mask, non-skid safety shoes, hard hat or hearing protection used for appropriate conditions will reduce personal injuries.*

c) ***Prevent unintentional starting. Ensure the switch is in the off-position before connecting to power source and/or battery pack, picking up or carrying the tool.*** *Carrying power tools with your finger on the switch or energising power tools that have the switch on invites accidents.*

d) ***Remove any adjusting key or wrench before turning the power tool on.*** *A wrench or a key left attached to a rotating part of the power tool may result in personal injury.*

e) ***Do not overreach. Keep proper footing and balance at all times.*** *This enables better control of the power tool in unexpected situations.*

f) ***Dress properly. Do not wear loose clothing or jewellery. Keep your hair and clothing away from moving parts.*** *Loose clothes, jewellery or long hair can be caught in moving parts.*

g) ***If devices are provided for the connection of dust extraction and collection facilities, ensure these are connected and properly used.*** *Use of dust collection can reduce dust-related hazards.*

h) ***Do not let familiarity gained from frequent use of tools allow you to become complacent and ignore tool safety principles.*** *A careless action can cause severe injury within a fraction of a second.*

4) Power Tool Use and Care

a) ***Do not force the power tool. Use the correct power tool for your application.*** *The correct power tool will do the job better and safer at the rate for which it was designed.*

b) ***Do not use the power tool if the switch does not turn it on and off.*** *Any power tool that cannot be controlled with the switch is dangerous and must be repaired.*

c) ***Disconnect the plug from the power source and/ or remove the battery pack, if detachable, from the power tool before making any adjustments, changing accessories, or storing power tools.*** *Such preventive safety measures reduce the risk of starting the power tool accidentally.*

d) ***Store idle power tools out of the reach of children and do not allow persons unfamiliar with the power tool or these instructions to operate the power tool.*** *Power tools are dangerous in the hands of untrained users.*

e) ***Maintain power tools and accessories. Check for misalignment or binding of moving parts, breakage of parts and any other condition that may affect the power tool's operation. If damaged, have the power tool repaired before use.*** *Many accidents are caused by poorly maintained power tools.*

f) ***Keep cutting tools sharp and clean.*** *Properly maintained cutting tools with sharp cutting edges are less likely to bind and are easier to control.*

g) ***Use the power tool, accessories and tool bits etc. in accordance with these instructions, taking into account the working conditions and the work to be performed.*** *Use of the power tool for operations different from those intended could result in a hazardous situation.*

h) ***Keep handles and grasping surfaces dry, clean and free from oil and grease.*** *Slippery handles and grasping surfaces do not allow for safe handling and control of the tool in unexpected situations.*

5) Battery Tool Use and Care

a) ***Recharge only with the charger specified by the manufacturer.*** *A charger that is suitable for one type of battery pack may create a risk of fire when used with another battery pack.*

b) ***Use power tools only with specifically designated battery packs.*** *Use of any other battery packs may create a risk of injury and fire.*

c) ***When battery pack is not in use, keep it away from other metal objects, like paper clips, coins, keys, nails, screws or other small metal objects, that can make a connection from one terminal to another.*** *Shorting the battery terminals together may cause burns or a fire.*

d) ***Under abusive conditions, liquid may be ejected from the battery; avoid contact. If contact accidentally occurs, flush with water. If liquid contacts eyes, additionally seek medical help.*** *Liquid ejected from the battery may cause irritation or burns.*

e) ***Do not use a battery pack or tool that is damaged or modified.*** *Damaged or modified batteries may exhibit unpredictable behaviour resulting in fire, explosion or risk of injury.*

f) ***Do not expose a battery pack or tool to fire or excessive temperature.*** *Exposure to fire or temperature above 130 °C may cause explosion.*

g) ***Follow all charging instructions and do not charge the battery pack or tool outside the temperature range specified in the instructions.*** *Charging improperly or at temperatures outside the specified range may damage the battery and increase the risk of fire.*

6) Service

a) ***Have your power tool serviced by a qualified repair person using only identical replacement parts.*** *This will ensure that the safety of the power tool is maintained.*

b) ***Never service damaged battery packs.*** *Service of battery packs should only be performed by the manufacturer or authorized service providers.*

Additional Specific Safety Instructions for Cut-Off Machines

a) ***The guard provided with the tool must be securely attached to the power tool and positioned for maximum safety, so the least amount of wheel is exposed towards the operator. Position yourself and bystanders away from the plane of the rotating wheel.*** *The guard helps to protect operator from broken wheel fragments and accidental contact with wheel.*

b) ***Use only bonded reinforced wheels or diamond blades for your power tool.*** *Just because an accessory can be attached to your power tool, it does not assure safe operation.*

c) ***The rated speed of the accessory must be at least equal to the maximum speed marked on the power tool.*** *Accessories running faster than their rated speed can break and fly apart.*

d) ***Wheels must be used only for recommended applications. For example: do not grind with the side of cut-off wheel.*** *Abrasive cut-off wheels are intended for peripheral grinding, side forces applied to these wheels may cause them to shatter.*

e) ***Always use undamaged wheel flanges that are of correct diameter for your selected wheel.*** *Proper wheel flanges support the wheel thus reducing the possibility of wheel breakage.*

f) ***Do not use worn down reinforced wheels from larger power tools.*** *Wheels intended for a larger power tool are not suitable for the higher speed of a smaller tool and may burst.*

g) ***The outside diameter and the thickness of your accessory must be within the capacity rating of your power tool.*** *Incorrectly sized accessories cannot be adequately guarded or controlled.*

h) ***The arbor size of wheels and flanges must properly fit the spindle of the power tool.*** *Wheels and flanges with arbour holes that do not match the mounting hardware of the power tool will run out of balance, vibrate excessively and may cause loss of control.*

i) ***Do not use damaged wheels. Before each use, inspect the wheels for chips and cracks. If power tool or wheel is dropped, inspect for damage or install an undamaged wheel. After inspecting and installing the wheel, position yourself and bystanders away from the plane of the rotating wheel and run the power tool at maximum no load speed for one minute.*** *Damaged wheels will normally break apart during this test time.*

j) ***Wear personal protective equipment. Depending on application, use face shield, safety goggles or safety glasses. As appropriate, wear dust mask, hearing protectors, gloves and shop apron capable of stopping small abrasive or workpiece fragments. The eye protection must be capable of stopping flying debris generated by various operations. The dust mask or respirator must be capable of filtering particles generated by your operation.*** *Prolonged exposure to high intensity noise may cause hearing loss.*

k) ***Keep bystanders a safe distance away from work area. Anyone entering the work area must wear personal protective equipment.*** *Fragments of workpiece or of a broken wheel may fly away and cause injury beyond immediate area of operation.*

l) ***Hold the power tool by insulated gripping surfaces only, when performing an operation where the cutting accessory may contact hidden wiring.*** *Cutting accessory contacting a "live" wire may make exposed metal parts of the power tool "live" and could give the operator an electric shock.*

m) ***Never lay the power tool down until the accessory has come to a complete stop.*** *The spinning wheel may grab the surface and pull the power tool out of your control.*

n) ***Do not run the power tool while carrying it at your side.*** *Accidental contact with the spinning accessory could snag your clothing, pulling the accessory into your body.*

o) ***Regularly clean the power tool's air vents.*** *The motor's fan will draw the dust inside the housing and excessive accumulation of powdered metal may cause electrical hazards.*

p) ***Do not operate the power tool near flammable materials.*** *Sparks could ignite these materials.*

q) ***Do not use accessories that require liquid coolants.*** *Using water or other liquid coolants may result in electrocution or shock.*

Kickback and Related Warnings

Kickback is a sudden reaction to a pinched or snagged rotating wheel. Pinching or snagging causes rapid stalling of the rotating wheel which in turn causes the uncontrolled power tool to be forced in the direction opposite of the wheel's rotation at the point of the binding.

For example, if an abrasive wheel is snagged or pinched by the workpiece, the edge of the wheel that is entering into the pinch point can dig into the surface of the material causing the wheel to climb out or kick out. The wheel may either jump toward or away from the operator, depending on direction of the wheel's movement at the point of pinching. Abrasive wheels may also break under these conditions.

Kickback is the result of power tool misuse and/or incorrect operating procedures or conditions and can be avoided by taking proper precautions as given below.

a) ***Maintain a firm grip on the power tool and position your body and arm to allow you to resist kickback forces. Always use auxiliary handle, if provided, for maximum control over kickback or torque reaction during start-up.*** *The operator can control torque reactions or kickback forces, if proper precautions are taken.*

b) ***Never place your hand near the rotating accessory.*** *Accessory may kickback over your hand.*

c) ***Do not position your body in line with the rotating wheel.*** *Kickback will propel the tool in direction opposite to the wheel's movement at the point of snagging.*

d) ***Use special care when working corners, sharp edges etc. Avoid bouncing and snagging the accessory.*** *Corners, sharp edges or bouncing have a tendency to snag the rotating accessory and cause loss of control or kickback.*

e) ***Do not attach a saw chain, woodcarving blade, segmented diamond wheel with a peripheral gap greater than 10 mm or toothed saw blade.*** *Such blades create frequent kickback and loss of control.*

f) ***Do not "jam" the wheel or apply excessive pressure. Do not attempt to make an excessive depth of cut.*** *Overstressing the wheel increases the loading and susceptibility to twisting or binding of the wheel in the cut and the possibility of kickback or wheel breakage.*

g) ***When wheel is binding or when interrupting a cut for any reason, switch off the power tool and hold the power tool motionless until the wheel comes to a complete stop. Never attempt to remove the wheel from the cut while the wheel is in motion otherwise kickback may occur.*** *Investigate and take corrective action to eliminate the cause of wheel binding.*

h) ***Do not restart the cutting operation in the workpiece. Let the wheel reach full speed and carefully re-enter the cut.*** *The wheel may bind, walk up or kickback if the power tool is restarted in the workpiece.*

i) ***Support panels or any oversized workpiece to minimize the risk of wheel pinching and kickback. Large workpieces tend to sag under their own weight.*** *Supports must be placed under the workpiece near the line of cut and near the edge of the workpiece on both sides of the wheel.*

j) ***Use extra caution when making a "pocket cut" into existing walls or other blind areas.*** *The protruding wheel may cut gas or water pipes, electrical wiring or objects that can cause kickback.*

Additional Safety Information

- ***Do not use the upper quarter of the wheel for cutting.*** *Serious injury may result due to kickback.*
- ***Use of accessories not specified in this manual is not recommended and may be hazardous.*** *Use of power boosters that would cause the tool to be driven at speeds greater than its rated speed constitutes misuse.*
- ***Do not use circular saw blades with this tool.*** *Serious injury may result.*
- ***Avoid bouncing the wheel or giving it rough treatment.*** *If this occurs, stop the tool and inspect the wheel for cracks or flaws.*
- ***Direct sparks away from operator, bystanders or flammable materials.*** *Sparks may be produced while using a sander or grinder. Sparks may cause burns or start fires.*
- ***Always use front handle. Tighten the handle securely.*** *The front handle should always be used to maintain control of the tool at all times.*
- ***Never cut into area that may contain electrical wiring or piping.*** *Serious injury may result.*
- ***Clean out your tool often, especially after heavy use.*** *Dust and grit containing metal particles often accumulate on interior surfaces and could create an electric shock hazard.*
- ***Do not operate this tool for long periods of time. Vibration caused by tool action may be harmful to your hands and arms.*** *Use gloves to provide extra cushion and limit exposure by taking frequent rest periods.*
- ***Dust, crystalline material, vapor and smoke may be produced while working.*** *Always wear a dust mask or respiratory protection. Danger for health!*

Residual Risks

In spite of the application of the relevant safety regulations and the implementation of safety devices, certain residual risks cannot be avoided. These are:

- *Impairment of hearing.*
- *Risk of personal injury due to flying particles.*
- *Risk of burns due to accessories becoming hot during operation.*
- *Risk of personal injury due to prolonged use.*
- *Health hazards caused by breathing dust developed when working in concrete and/or masonry.*

Chargers

DEWALT chargers require no adjustment and are designed to be as easy as possible to operate.

Electrical Safety

The electric motor has been designed for one voltage only. Always check that the battery pack voltage corresponds to the voltage on the rating plate. Also make sure that the voltage of your charger corresponds to that of your mains.



Your DEWALTcharger is double insulated in accordance with EN60335; therefore no earth wire is required.

If the supply cord is damaged, it must be replaced only by DEWALT or an authorised service organisation.

Mains Plug Replacement (U.K. & Ireland Only)

If a new mains plug needs to be fitted:

- *Safely dispose of the old plug.*
- *Connect the brown lead to the live terminal in the plug.*
- *Connect the blue lead to the neutral terminal.*



WARNING: *No connection is to be made to the earth terminal.*

Follow the fitting instructions supplied with good quality plugs. Recommended fuse: 3 A.

Using an Extension Cable

An extension cord should not be used unless absolutely necessary. Use an approved extension cable suitable for the power input of your charger (see ***Technical Data***). The minimum conductor size is 1 mm^2; the maximum length is 30 m.

When using a cable reel, always unwind the cable completely.

Important Safety Instructions for All Battery Chargers

SAVE THESE INSTRUCTIONS: This manual contains important safety and operating instructions for compatible battery chargers (refer to ***Technical Data***).

- *Before using charger, read all instructions and cautionary markings on charger, battery pack, and product using battery pack.*



WARNING: *Shock hazard. Do not allow any liquid to get inside charger. Electric shock may result.*



WARNING: *We recommend the use of a residual current device with a residual current rating of 30mA or less.*



CAUTION: *Burn hazard. To reduce the risk of injury, charge only DEWALT rechargeable batteries. Other types of batteries may burst causing personal injury and damage.*



CAUTION: *Children should be supervised to ensure that they do not play with the appliance.*

NOTICE: *Under certain conditions, with the charger plugged into the power supply, the exposed charging contacts inside the charger can be shorted by foreign material. Foreign materials of a conductive nature such as, but not limited to, steel wool, aluminum foil or any buildup of metallic particles should be kept away from charger cavities. Always unplug the charger from the power supply when there is no battery pack in the cavity. Unplug charger before attempting to clean.*

- ***DO NOT attempt to charge the battery pack with any chargers other than the ones in this manual.*** *The charger and battery pack are specifically designed to work together.*
- ***These chargers are not intended for any uses other than charging DEWALT rechargeable batteries.*** *Any other uses may result in risk of fire, electric shock or electrocution.*
- ***Do not expose charger to rain or snow.***
- ***Pull by plug rather than cord when disconnecting charger.*** *This will reduce risk of damage to electric plug and cord.*
- ***Make sure that cord is located so that it will not be stepped on, tripped over, or otherwise subjected to damage or stress.***
- ***Do not use an extension cord unless it is absolutely necessary.*** *Use of improper extension cord could result in risk of fire,electric shock, or electrocution.*
- ***Do not place any object on top of charger or place the charger on a soft surface that might block the ventilation slots and result in excessive internal heat.*** *Place the charger in a position away from any heat source. The charger is ventilated through slots in the top and the bottom of the housing.*
- ***Do not operate charger with damaged cord or plug—*** *have them replaced immediately.*
- ***Do not operate charger if it has received a sharp blow, been dropped, or otherwise damaged in any way.*** *Take it to an authorised service centre.*
- ***Do not disassemble charger; take it to an authorised service centre when service or repair is required.*** *Incorrect reassembly may result in a risk of electric shock, electrocution or fire.*
- *In case of damaged power supply cord, the supply cord must be replaced immediately by the manufacturer, its service agent or similar qualified person to prevent any hazard.*
- ***Disconnect the charger from the outlet before attempting any cleaning. This will reduce the risk of electric shock.*** *Removing the battery pack will not reduce this risk.*
- ***NEVER*** *attempt to connect two chargers together.*
- ***The charger is designed to operate on standard 230V household electrical power. Do not attempt to use it on any other voltage.*** *This does not apply to the vehicular charger.*

Charging a Battery (Fig. B)

1. Plug the charger into an appropriate outlet before inserting battery pack.
2. Insert the battery pack **24** into the charger, making sure the battery pack is fully seated in the charger. The red (charging) light will blink repeatedly indicating that the charging process has started.
3. The completion of charge will be indicated by the red light remaining ON continuously. The battery pack is fully charged and may be used at this time or left in the charger. To remove the battery pack from the charger, push the battery release button **16** on the battery pack.

NOTE: To ensure maximum performance and life of lithium-ion battery packs, charge the battery pack fully before first use.

Charger Operation

Refer to the indicators below for the charge status of the battery pack.

Charge Indicators	
Charging	— — — —
Fully Charged	———
Hot/Cold Pack Delay*	— — — | ———

*The red light will continue to blink, but a yellow indicator light will be illuminated during this operation. Once the battery pack has reached an appropriate temperature, the yellow light will turn off and the charger will resume the charging procedure.

The compatible charger(s) will not charge a faulty battery pack. The charger will indicate faulty battery by refusing to light.

NOTE: This could also mean a problem with a charger.

If the charger indicates a problem, take the charger and battery pack to be tested at an authorised service centre.

Hot/Cold Pack Delay

When the charger detects a battery pack that is too hot or too cold, it automatically starts a Hot/Cold Pack Delay, suspending charging until the battery pack has reached an appropriate temperature. The charger then automatically switches to the pack charging mode. This feature ensures maximum battery pack life.

A cold battery pack will charge at a slower rate than a warm battery pack. The battery pack will charge at that slower rate throughout the entire charging cycle and will not return to maximum charge rate even if the battery pack warms.

The DCB118 charger is equipped with an internal fan designed to cool the battery pack. The fan will turn on automatically when the battery pack needs to be cooled. Never operate the charger if the fan does not operate properly or if ventilation slots are blocked. Do not permit foreign objects to enter the interior of the charger.

Electronic Protection System

XR Li-Ion tools are designed with an Electronic Protection System that will protect the battery pack against overloading, overheating or deep discharge.

The tool will automatically turn off if the Electronic Protection System engages. If this occurs, place the lithium-ion battery pack on the charger until it is fully charged.

Wall Mounting

These chargers are designed to be wall mountable or to sit upright on a table or work surface. If wall mounting, locate the charger within reach of an electrical outlet, and away from a corner or other obstructions which may impede air flow. Use the back of the charger as a template for the location of the mounting screws on the wall. Mount the charger securely using drywall screws (purchased separately) at least 25.4 mm long with a screw head diameter of 7–9 mm, screwed into wood to an optimal depth leaving approximately 5.5 mm of the screw exposed. Align the slots on the back of the charger with the exposed screws and fully engage them in the slots.

Charger Cleaning Instructions

WARNING: Shock hazard. Disconnect the charger from the AC outlet before cleaning. *Dirt and grease may be removed from the exterior of the charger using a cloth or soft non-metallic brush. Do not use water or any cleaning solutions. Never let any liquid get inside the tool; never immerse any part of the tool into a liquid.*

Battery Packs

Important Safety Instructions for All Battery Packs

When ordering replacement battery packs, be sure to include catalogue number and voltage.

The battery pack is not fully charged out of the carton. Before using the battery pack and charger, read the safety instructions below. Then follow charging procedures outlined.

READ ALL INSTRUCTIONS

- ***Do not charge or use battery in explosive atmospheres, such as in the presence of flammable liquids, gases or dust.*** *Inserting or removing the battery from the charger may ignite the dust or fumes.*
- ***Never force battery pack into charger. Do not modify battery pack in any way to fit into a non-compatible charger as battery pack may rupture causing serious personal injury.***
- *Charge the battery packs only in DEWALT chargers.*
- ***DO NOT*** *splash or immerse in water or other liquids.*
- ***Do not store or use the tool and battery pack in locations where the temperature may fall below 4 ˚C (39.2 ˚F) (such as outside sheds or metal buildings in winter), or reach or exceed 40 ˚C (104 ˚F) (such as outside sheds or metal buildings in summer).***
- ***Do not incinerate the battery pack even if it is severely damaged or is completely worn out.*** *The battery pack can explode in a fire. Toxic fumes and materials are created when lithium-ion battery packs are burned.*
- ***If battery contents come into contact with the skin, immediately wash area with mild soap and water.*** *If battery liquid gets into the eye, rinse water over the open eye for 15 minutes or until irritation ceases. If medical attention is needed, the battery electrolyte is composed of a mixture of liquid organic carbonates and lithium salts.*
- ***Contents of opened battery cells may cause respiratory irritation.*** *Provide fresh air. If symptoms persists, seek medical attention.*

WARNING: *Burn hazard. Battery liquid may be flammable if exposed to spark or flame.*

WARNING: *Never attempt to open the battery pack for any reason. If battery pack case is cracked or damaged, do not insert into charger. Do not crush, drop or damage battery pack. Do not use a battery pack or charger that has received a sharp blow, been dropped, run over or damaged in any way (i.e., pierced with a nail, hit with a hammer, stepped on). Electric shock or electrocution may result. Damaged battery packs should be returned to service centre for recycling.*

WARNING: Fire hazard. Do not store or carry the battery pack so that metal objects can contact exposed battery terminals. *For example, do not place the battery pack in aprons, pockets, tool boxes, product kit boxes, drawers, etc., with loose nails, screws, keys, etc.*

CAUTION: When not in use, place tool on its side on a stable surface where it will not cause a tripping or falling hazard. *Some tools with large battery packs will stand upright on the battery pack but may be easily knocked over.*

Transportation

WARNING: Fire hazard. *Transporting batteries can possibly cause fire if the battery terminals inadvertently come in contact with conductive materials. When transporting batteries, make sure that the battery terminals are protected and well insulated from materials that could contact them and cause a short*

*circuit. **NOTE:** Lithium-ion batteries should not be put in checked baggage.*

DEWALT batteries comply with all applicable shipping regulations as prescribed by industry and legal standards which include UN Recommendations on the Transport of Dangerous Goods; International Air Transport Association (IATA) Dangerous Goods Regulations, International Maritime Dangerous Goods (IMDG) Regulations, and the European Agreement Concerning The International Carriage of Dangerous Goods by Road (ADR). Lithium-ion cells and batteries have been tested to section 38.3 of the UN Recommendations on the Transport of Dangerous Goods Manual of Tests and Criteria.

In most instances, shipping a DEWALT battery pack will be excepted from being classified as a fully regulated Class 9 Hazardous Material. In general, only shipments containing a lithium-ion battery with an energy rating greater than 100 Watt Hours (Wh) will require being shipped as fully regulated Class 9. All lithium-ion batteries have the Watt Hour rating marked on the pack. Furthermore, due to regulation complexities, DEWALT does not recommend air shipping lithium-ion battery packs alone regardless of Watt Hour rating. Shipments of tools with batteries (combo kits) can be air shipped as excepted if the Watt Hour rating of the battery pack is no greater than 100 Wh.

Regardless of whether a shipment is considered excepted or fully regulated, it is the shipper's responsibility to consult the latest regulations for packaging, labeling/marking and documentation requirements.

The information provided in this section of the manual is provided in good faith and believed to be accurate at the time the document was created. However, no warranty, expressed or implied, is given. It is the buyer's responsibility to ensure that its activities comply with the applicable regulations.

Transporting the FLEXVOLT™ Battery

The DEWALT FLEXVOLT™ battery has two modes: **Use** and **Transport**.

Use Mode: When the FLEXVOLT™ battery stands alone or is in a DEWALT 18V product, it will operate as an 18V battery. When the FLEXVOLT™ battery is in a 54V or a 108V (two 54V batteries) product, it will operate as a 54V battery.

Transport Mode: When the cap is attached to the FLEXVOLT™ battery, the battery is in Transport mode. Keep the cap for shipping.

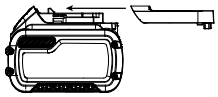

When in Transport mode, strings of cells are electrically disconnected within the pack resulting in 3 batteries with a lower Watt hour (Wh) rating as compared to 1 battery with a higher Watt hour rating. This increased quantity of 3 batteries with the lower Watt hour rating can exempt the pack from certain shipping regulations that are imposed upon the higher Watt hour batteries.

For example, the Transport Wh rating might indicate 3 x 36 Wh, meaning 3 batteries of 36 Wh each. The Use Wh rating might indicate 108 Wh (1 battery implied).

Example of Use and Transport Label Marking

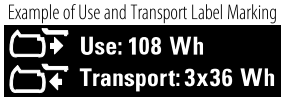

Storage Recommendations

1. The best storage place is one that is cool and dry away from direct sunlight and excess heat or cold. For optimum battery performance and life, store battery packs at room temperature when not in use.
2. For long storage, it is recommended to store a fully charged battery pack in a cool, dry place out of the charger for optimal results.

NOTE: Battery packs should not be stored completely depleted of charge. The battery pack will need to be recharged before use.

Labels on Charger and Battery Pack

In addition to the pictographs used in this manual, the labels on the charger and the battery pack may show the following pictographs:



Read instruction manual before use.



See ***Technical Data*** for charging time.



Do not probe with conductive objects.



Do not charge damaged battery packs.



Do not expose to water.



Have defective cords replaced immediately



Charge only between 4 °C and 40 °C.



Only for indoor use.



Discard the battery pack with due care for the environment.



Charge battery packs only with designated DEWALT chargers. Charging battery packs other than the designated DEWALT batteries with a DEWALT charger may make them burst or lead to other dangerous situations.



Do not incinerate the battery pack.



USE (without transport cap). Example: Wh rating indicates 108 Wh (1 battery with 108 Wh).

TRANSPORT (with built-in transport cap). Example: Wh rating indicates 3 x 36 Wh (3 batteries of 36 Wh).

Battery Type

The following tools operate on a 54 volt battery pack: DCS691

These battery packs may be used: , DCB546, DCB547, DCB548, DCB549. Refer to ***Technical Data*** for more information.

Package Contents

The package contains:

1 Cut off tool
1 Diamond blade (X2 version only)
1 12.7 mm wrench
1 Battery charger (X2 version only)
2 Li-Ion battery packs (X2 version only)
1 Instruction manual

NOTE: Battery packs, chargers and kitboxes are not included with N models. Battery packs and chargers are not included with NT models. B models include Bluetooth® battery packs.

NOTE: The Bluetooth® word mark and logos are registered trademarks owned by the Bluetooth®, SIG, Inc. and any use of such marks by DEWALT is under license. Other trademarks and trade names are those of their respective owners.

- *Check for damage to the tool, parts or accessories which may have occurred during transport.*
- *Take the time to thoroughly read and understand this manual prior to operation.*

Markings on Tool

The following pictograms are shown on the tool:


Read instruction manual before use.


Wear ear protection.


Wear eye protection.


Risk of dust emission.


Higher risk of kickback! Do not use the upper quarter of the wheel for cutting.

Date Code Position (Fig. A)

The date code **14**, which also includes the year of manufacture, is printed into the housing.

Example:

2022 XX XX

Year and Week of Manufacture

Description (Fig. A)

WARNING: *Never modify the power tool or any part of it. Damage or personal injury could result.*

1 Main handle
2 Trigger switch
3 Lock-off button
4 Battery door
5 12.7 mm wrench
6 LED light
7 Front handle
8 Guard
9 Arbor screw
10 Spindle lock button
11 Guard rotation lever
12 Shoe
13 Water valve
14 Date code
15 Water inlet

Intended Use

Your cut-off tool is designed for professional cutting applications. Only use wet cut method when cutting concrete. Dry cutting is possible when cutting metal.

DO NOT use in the presence of flammable liquids or gases.

Your cut-off tool is a professional power tool.

DO NOT let children come into contact with the tool. Supervision is required when inexperienced operators use this tool.

- **Young children and the infirm.** This appliance is not intended for use by young children or infirm persons without supervision.
- This product is not intended for use by persons (including children) suffering from diminished physical, sensory or mental abilities; lack of experience, knowledge or skills unless they are supervised by a person responsible for their safety. Children should never be left alone with this product.
- **DO NOT** cut concrete without connecting the water supply system.

ASSEMBLY AND ADJUSTMENTS

WARNING: To reduce the risk of serious personal injury, turn tool off and disconnect battery pack before making any adjustments or removing/ installing attachments or accessories. *An accidental start-up can cause injury.*

WARNING: *Use only DEWALT battery packs and chargers.*

Inserting and Removing the Battery Pack from the Tool (Fig. B)

WARNING: *Do not work with unlatched battery door. Prevent water entering into the battery compartment.*

NOTE: Make sure your battery pack **24** is fully charged.

To Install the Battery Pack into the Tool

1. Unlatch and open the battery door **4**.
2. To install the battery pack **24** into the tool, align the battery pack with the rails inside the tool and slide it in until the battery pack is firmly seated. Ensure that it does not disengage.
3. Close the battery door and ensure it is closed securely.

To Remove the Battery Pack from the Tool

1. Unlatch and open the battery door.
2. Press the release button **16** and firmly pull the battery pack out of the tool.
3. Insert it into the charger as described in ***Charging a Battery***.

Do not leave the battery door open.

Fuel Gauge Battery Packs (Fig. B)

Some DEWALT battery packs include a fuel gauge which consists of three green LED lights that indicate the level of charge remaining in the battery pack.

To actuate the fuel gauge, press and hold the fuel gauge button 23. A combination of the three green LED lights will illuminate designating the level of charge left. When the level of charge in the battery is below the usable limit, the fuel gauge will not illuminate and the battery will need to be recharged.

NOTE: The fuel gauge is only an indication of the charge left on the battery pack. It does not indicate tool functionality and is subject to variation based on product components, temperature and end-user application.

Installing Wheels (Fig. A, C)

WARNING: *Burn Hazard. Sharp parts. ALWAYS wear gloves when changing wheels. Wheels have sharp edges or may get extremely hot during operation, and may damage bare hands.*

1. Lay unit on a firm surface, with the spindle 21 facing upward.
2. Hold spindle lock button 10 to keep the spindle from turning.
3. Using supplied 12.7 mm wrench 5 (located in the battery compartment), remove spindle nut 17, outer clamp washer 18 and used wheel 19 if one is installed. Spindle threads are right hand.
4. The inner clamp washer 20 is held in place with a double D shaft and retaining ring.
5. Slip wheel over spindle. Be sure wheel goes over pilot diameter of inner clamp washer. Slip on outer clamp washer. Start threading on spindle nut which will self align outer clamp washer. Make sure the wheel is fitted in the correct orientation.
6. Engage spindle lock button and tighten nut with wrench. Do not over tighten spindle nut.
7. Turn wheel by hand to ensure it is properly centered. The wheel should not hit the shoe, guard or nut. The nut and flanges should be tight.

CAUTION: *Only use 230 mm Type 1/41 wheels with 22.2 mm arbor hole with this tool. Never force a wheel onto the machine or alter the size of the arbor hole.*

Adjusting the Guard Angle (Fig. D)

WARNING: *There is a higher risk of kickback when guard is moved backwards leading to wider opening. The guard must be opened wider only when required.*

You can adjust the angle of the guard.

1. To adjust the angle of the guard, pull back the guard rotation lever 11 and hold it.
2. Grasp the guard 8 firmly and rotate to desired angle.
3. Release the guard rotation lever and make sure it engages, locking the guard in place. If the guard rotation lever doesn't engage, rotate the guard slightly until the guard rotation lever returns to the locked position.

DEWALT Tool Tag Ready (Fig. G)

Optional Accessory

Your cut-off tool comes with mounting holes 22 and fasteners for installing a DEWALT Tool Tag. You will need a T15 bit tip to install the tag. The DEWALT Tool Tag is designed for tracking and locating professional power tools, equipment, and machines using the DEWALT Tool Connect™ app. For proper installation of the DEWALT Tool Tag refer to the DEWALT Tool Tag manual.

OPERATION

Instructions for Use

WARNING: *Always observe the safety instructions and applicable regulations.*

WARNING: To reduce the risk of serious personal injury, turn tool off and disconnect battery pack before making any adjustments or removing/ installing attachments or accessories. *An accidental start-up can cause injury.*

Proper Hand Position (Fig. F)

WARNING: *To reduce the risk of serious personal injury,* ***ALWAYS*** *use proper hand position as shown.*

WARNING: *To reduce the risk of serious personal injury,* ***ALWAYS*** *hold securely in anticipation of a sudden reaction.*

Proper hand position requires one hand on the main handle 1 and one hand on the front handle 7.

Wireless Tool Control (Fig. A)

CAUTION: *Read all saftey warnings, instruction and specifications of the appliance which is paired with the tool.*

Your tool is equipped with a Wireless Tool Control transmitter which allows your tool to be wirelessly paired with another Wireless Tool Control device.

To pair your tool using Wireless Tool Control, press and hold the trigger switch 2 on the tool and the Wireless Tool Control pairing button on the seperate device. An LED on the seperate device will let you know when your tool has been successfully paired.

Spindle Lock Button (Fig. A, C)

The spindle lock button 10 is used to lock the spindle 21 when changing accessories.

1. To engage the spindle lock button, remove the battery pack and make sure trigger switch is in OFF position.
2. Depress the spindle lock button and turn the wheel and spindle until the lock button engages the spindle.
3. Use supplied wrench 5 to unscrew the spindle nut 17 and remove or mount accessories. Spindle threads are right hand.

Lock-Off Button (Fig. A)

Your cut-off tool is equipped with a lock-off button 3. To lock the trigger switch in the OFF postition, push the lock-off button

from the left side of the tool. To unlock the trigger switch, push the lock-off button from the right side of the tool.

LED Light (Fig. A)

The LED light 6 will illuminate as a warning when the tool is being pushed too hard. Continuing to use the tool after the LED is lit could cause the tool to hot pack or shut down.

To Operate (Fig. A)

CAUTION: *Before attempting to start, grasp tool firmly with both hands before lifting.*

WARNING: *Edge cutting can be performed only with wheels that are designed and specified for this purpose. Protect yourself during edge cutting by directing the open side of the guard toward a surface.*

WARNING: *Wheels used for cutting may break or kick back if they bend or twist while the tool is being used to do cut-off work.*

WARNING: *Do not use edge cutting wheels for surface grinding applications because these wheels are not designed for side pressures encountered with surface grinding. Wheel breakage and injury may result.*

1. Grasp main handle 1 and front handle 7 firmly.
2. Line up wheel with material to be cut. Be sure nothing is near or in line with the wheel.
3. To turn the tool on, depress the trigger switch 2. Then slowly feed wheel into work with firm pressure. The shoe 12 may be used to help guide the tool when making cuts. Do not force the tool. For maximum efficiency and wheel life, keep the wheel speed high.
4. To stop tool, release trigger switch 2.

Wet Cut Method (Fig. A, G, H)

CAUTION: *Never use the saw over head. When using water, limit cutting to the horizontal position to reduce the risk of water entering the tool.*

WARNING: Wet cut method *is to be used only with a diamond blade.*

1. Attach the water supply to the water inlet 15.
2. To regulate the water flow, rotate the water valve 13 to the open position as shown in Figure G. To stop the flow of water, rotate the water valve to the closed postion as shown in Figure H.
3. Proceed to cut as described in ***To Operate***.
4. After work, disconnect the water supply from the tool.

Applications

WARNING: *NEVER cut magnesium with this tool. Magnesium particles may ignite causing personal injury.*

WARNING: *Cutting concrete must ONLY be done using the wet cut method.*

- 3 mm max. gauge sheet metal
- Concrete, cinder blocks and bricks
- Reinforcing rod; generally under 25.4 mm diameter
- 3 mm diameter concrete wire mesh
- Corrugated floor and ceiling form (concrete forms)
- Electrical conduit 3 mm wall thickness
- 3 mm max. thick structural forms such as channel, angles, plate, etc.

NOTE: The cutting of materials heavier than those listed above are not recommended due to the possibility of electrical overloading.

Transportation and Storage

During transportation and storage lock the trigger switch with the lock-off button.

Remove the battery pack during the tool storage.

MAINTENANCE

Your power tool has been designed to operate over a long period of time with a minimum of maintenance. Continuous satisfactory operation depends upon proper tool care and regular cleaning.

WARNING: To reduce the risk of serious personal injury, turn tool off and disconnect battery pack before making any adjustments or removing/ installing attachments or accessories. *An accidental start-up can cause injury.*

The charger and battery pack are not serviceable.

Lubrication

Your power tool requires no additional lubrication.

Cleaning

WARNING: *Blow dirt and dust out of the main housing with dry air as often as dirt is seen collecting in and around the air vents. Wear approved eye protection and approved dust mask when performing this procedure.*

WARNING: *Never use solvents or other harsh chemicals for cleaning the non-metallic parts of the tool. These chemicals may weaken the materials used in these parts. Use a cloth dampened only with water and mild soap. Never let any liquid get inside the tool; never immerse any part of the tool into a liquid.*

Optional Accessories

WARNING: *Since accessories, other than those offered by DEWALT, have not been tested with this product, use of such accessories with this tool could be hazardous. To reduce the risk of injury, only DEWALT recommended accessories should be used with this product.*

Consult your dealer for further information on the appropriate accessories.

Protecting the Environment



Separate collection. Products and batteries marked with this symbol must not be disposed of with normal household waste.

Products and batteries contain materials that can be recovered or recycled reducing the demand for raw materials. Please recycle electrical products and batteries according to local provisions. Further information is available at **www.2helpU.com**.

Rechargeable Battery Pack

This long life battery pack must be recharged when it fails to produce sufficient power on jobs which were easily done before. At the end of its technical life, discard it with due care for our environment:

- Run the battery pack down completely, then remove it from the tool.
- Li-Ion cells are recyclable. Take them to your dealer or a local recycling station. The collected battery packs will be recycled or disposed of properly.

TRONZADORA DCS691

¡Enhorabuena!

Ha elegido una herramienta DEWALT. Años de experiencia, innovación y un exhaustivo desarrollo de productos hacen que DEWALT sea una de las empresas más fiables para los usuarios de herramientas eléctricas profesionales.

Datos técnicos

		DCS691
Voltaje	V_{DC}	54
Tipo		1
Tipo de batería		Li-Ion
Diámetro del disco	mm	230
Calibre del disco	mm	22,2
Velocidad nominal/sin carga	min^{-1}	6600
Espesor del perímetro del disco (máx.)		
Metal	mm	3,6
Resina aglomerada	mm	3,6
Tamaño de la rosca		M8
Conector de agua rápido	mm	12,5
Transmisor Wireless Tool Control		
Banda de frecuencia	MHz	433
Potencia máx. (EIRP)	mW	0,03
Peso (sin paquete de batería)	kg	5,7

Valores de ruido y vibración bajo carga (suma de vectores triaxiales) conformes a EN60745-2-22:		
L_{PA} (nivel de presión sonora de emisión)	dB(A)	105
L_{WA} (nivel de potencia sonora)	dB(A)	116
K (incertidumbre para el nivel de sonido dado)	dB(A)	3,0

Valor de la emisión de vibración a_h =	m/s^2	5,0
Incertidumbre K =	m/s^2	1,5

El nivel de emisión de vibraciones y/o ruido que figura en esta hoja de información ha sido medido de conformidad con una prueba normalizada prevista en las normas EN60745 y puede utilizarse para comparar herramientas entre sí. Puede usarse para una evaluación preliminar de exposición.

ADVERTENCIA: *El nivel de emisión de vibraciones y/o ruido declarado representa las principales aplicaciones de la herramienta. Sin embargo, si se utiliza la herramienta para distintas aplicaciones, con accesorios diferentes o mal mantenidos, la emisión de vibraciones y/o ruido puede variar. Esto puede aumentar considerablemente el nivel de exposición durante el período total de trabajo.*

Una valoración del nivel de exposición a las vibraciones y/o ruido también debería tener en cuenta las veces en que la herramienta está apagada o en funcionamiento pero sin realizar ningún trabajo. Esto puede reducir considerablemente el nivel de exposición durante el periodo total de trabajo.

Identifique medidas de seguridad adicionales para proteger al operador de los efectos de las vibraciones y/o el ruido, como por ejemplo: efectuar el mantenimiento de la herramienta y los accesorios, mantener las manos calientes (relevante para las vibraciones) y organizar patrones de trabajo.

Declaración de Conformidad CE

Directiva de máquinas y Directiva de equipos de radio

CE

Tronzadora DCS691

DEWALT declara que los productos descritos bajo ***Datos Técnicos*** son conformes a las normas: 2006/42/CE, EN60745-1:2009+A11:2010, EN60745-2-22:2011+A11:2013.

Estos productos también son conformes con las Directivas 2014/30/UE y 2011/65/UE. Si desea más información, póngase en contacto con DEWALT en la dirección indicada a continuación o bien consulte la parte posterior de este manual.

El que suscribe es responsable de la compilación del archivo técnico y realiza esta declaración en representación de DEWALT.



Markus Rompel
Director de Ingeniería
DEWALT, Richard-Klinger-Strase 11,
D-65510, Idstein, Alemania
15.03.2022

ADVERTENCIA: *para reducir el riesgo de lesiones, lea el manual de instrucciones.*

Definiciones: normas de seguridad

Las siguientes definiciones describen el nivel de gravedad de las señales. Lea el manual y preste atención a estos símbolos.

PELIGRO: *indica una situación de peligro inminente, que si no se evita,* ***provocará*** *la* ***muerte o lesiones graves****.*

ADVERTENCIA: *indica una situación de posible peligro que, si no se evita, podría provocar la muerte o lesiones graves.*

ATENCIÓN: *indica una situación de posible peligro que, si no se evita, puede provocar lesiones leves o moderadas.*

Pilas				Tiempo Cargadores/Carga (Minutos)**								
Cat #	V_{DC}	Ah	Peso (kg)	DCB104	DCB107	DCB112	DCB113	DCB115	DCB116	DCB117	DCB118	DCB132
DCB546	18/54	6,0/2,0	1,08	60	270	170	140	90	80	40	60	90
DCB547	18/54	9,0/3,0	1,46	75*	420	270	220	135*	110*	60	75*	135*
DCB548	18/54	12,0/4,0	1,46	120	540	350	300	180	150	80	120	180
DCB549	18/54	15,0/5,0	2,12	125	730	450	380	230	170	90	125	230

**Código de fecha 201811475B o posterior*

AVISO: *Indica una práctica* ***no relacionada con las lesiones personales*** *que, de no evitarse,* ***puede*** *ocasionar* ***daños materiales****.*

Indica riesgo de descarga eléctrica.

Indica riesgo de incendio.

ADVERTENCIAS DE SEGURIDAD GENERALES PARA HERRAMIENTAS ELÉCTRICAS

ADVERTENCIA: Lea todas las advertencias de seguridad, instrucciones, ilustraciones y especificaciones suministradas con esta herramienta eléctrica. *El incumplimiento de las instrucciones que se indican a continuación puede causar descargas eléctricas, incendios y/o lesiones graves.*

CONSERVE TODAS LAS ADVERTENCIAS E INSTRUCCIONES PARA FUTURAS CONSULTAS

El término "herramienta eléctrica" que aparece en las advertencias se refiere a la herramienta eléctrica que funciona a través de la red eléctrica (con cable) o a la herramienta eléctrica que funciona con batería (sin cable).

1) Seguridad en el Área de Trabajo

a) ***Mantenga el área de trabajo limpia y bien iluminada.*** *Las áreas en desorden u oscuras pueden provocar accidentes.*

b) ***No utilice herramientas eléctricas en atmósferas explosivas, como ambientes donde haya polvo, gases o líquidos inflamables.*** *Las herramientas eléctricas originan chispas que pueden inflamar el polvo o los gases.*

c) ***Mantenga alejados a los niños y a las personas que estén cerca mientras utiliza una herramienta eléctrica.*** *Las distracciones pueden ocasionar que pierda el control.*

2) Seguridad Eléctrica

a) ***Los enchufes de las herramientas eléctricas deben corresponderse con la toma de corriente. No modifique nunca el enchufe de ninguna forma. No utilice ningún enchufe adaptador con herramientas eléctricas conectadas a tierra.*** *Los enchufes no modificados y las tomas de corriente correspondientes reducirán el riesgo de descarga eléctrica.*

b) ***Evite el contacto del cuerpo con superficies conectadas a tierra como tuberías, radiadores, cocinas económicas y frigoríficos.*** *Existe un mayor riesgo de descarga eléctrica si tiene el cuerpo conectado a tierra.*

c) ***No exponga las herramientas eléctricas a la lluvia ni a condiciones húmedas.*** *Si entra agua a una herramienta eléctrica aumentará el riesgo de descarga eléctrica.*

d) ***No someta el cable de alimentación a presión innecesaria. No use nunca el cable para transportar, tirar de la herramienta eléctrica o desenchufarla. Mantenga el cable alejado del calor, aceite, bordes afilados y piezas en movimiento.*** *Los cables dañados o enredados aumentan el riesgo de descarga eléctrica.*

e) ***Cuando esté utilizando una herramienta eléctrica al aire libre, use un cable alargador adecuado para uso en exteriores.*** *La utilización de un cable adecuado para el uso en exteriores reduce el riesgo de descarga eléctrica.*

f) ***Si no puede evitar utilizar una herramienta eléctrica en un lugar húmedo, use un suministro protegido con un dispositivo de corriente residual.*** *El uso de un dispositivo de corriente residual reduce el riesgo de descarga eléctrica.*

3) Seguridad Personal

a) ***Manténgase alerta, esté atento a lo que hace y use el sentido común cuando utilice una herramienta eléctrica. No maneje una herramienta eléctrica cuando esté cansado o bajo los efectos de drogas, medicamentos o alcohol.*** *Un momento de falta de atención cuando se manejan las herramientas eléctricas puede ocasionar lesiones personales graves.*

b) ***Use un equipo protector personal. Utilice siempre protección ocular.*** *El uso del equipo protector como mascarillas antipolvo, calzado antideslizante, casco o protección auditiva para condiciones apropiadas reducirá las lesiones personales.*

c) ***Evite la puesta en funcionamiento involuntaria. Asegúrese de que el interruptor esté en posición de apagado antes de conectar con la fuente de alimentación y/o la batería, de levantar o transportar la herramienta.*** *El transportar herramientas eléctricas con el dedo puesto en el interruptor o herramientas eléctricas activadoras que tengan el interruptor encendido puede provocar accidentes.*

d) ***Saque toda llave de ajuste o llave inglesa antes de encender la herramienta eléctrica.*** *Una llave*