DEWALT®

Dansk *(oversat fra original brugsvejledning)*	7
Deutsch *(Übersetzung der Originalanweisung)*	19
English ***(original instructions)***	32
Español *(traducido de las instrucciones originales)*	43
Français *(traduction de la notice d'instructions originale)*	56
Italiano *(tradotto dalle istruzioni originali)*	69
Nederlands *(vertaald vanuit de originele instructies)*	82
Norsk *(oversatt fra de originale instruksjonene)*	95
Português *(traduzido das instruções originais)*	106
Suomi *(käännetty alkuperäisestä käyttöohjeesta)*	119
Svenska *(översatt från de ursprungliga instruktionerna)*	130
Türkçe *(orijinal talimatlardan çevrilmiştir)*	141
Ελληνικά *(μετάφραση από τις πρωτότυπες οδηγίες)*	153

Copyright DEWALT

Fig. A

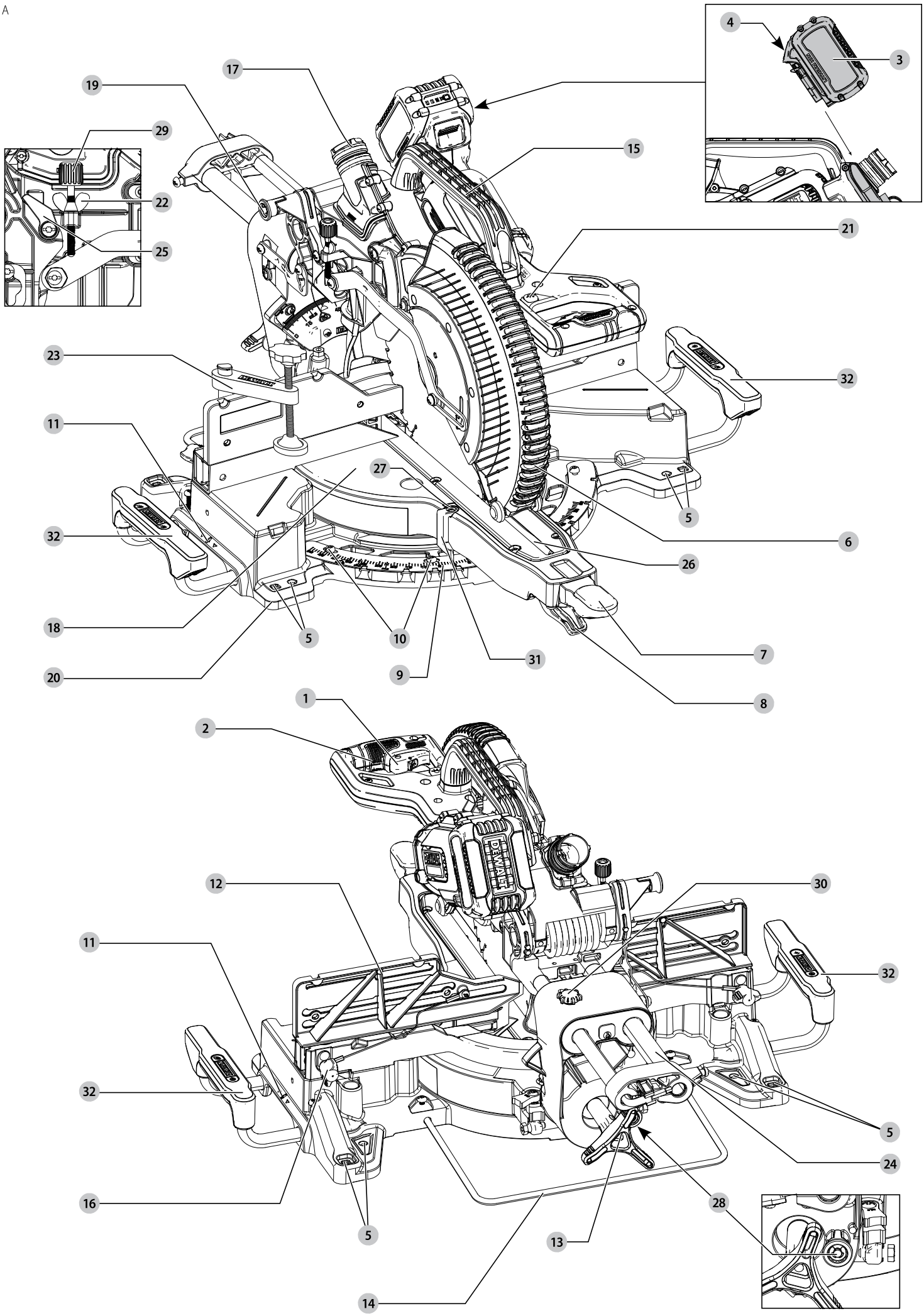
4
3
17
19
29
15
22
25
21
23
32
11
27
5
6
32
26
18
5
10
31
7
20
9
8
1
2
12
30
11
32
32
5
24
16
5
28
13
14

Fig. B

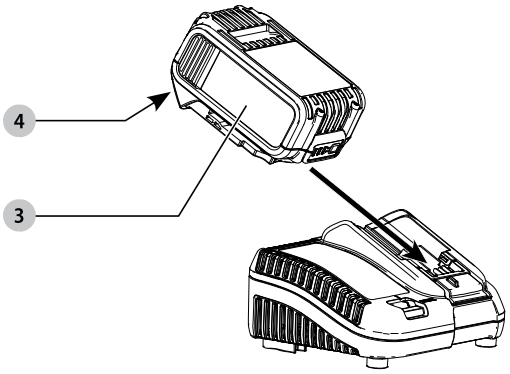

Fig. C

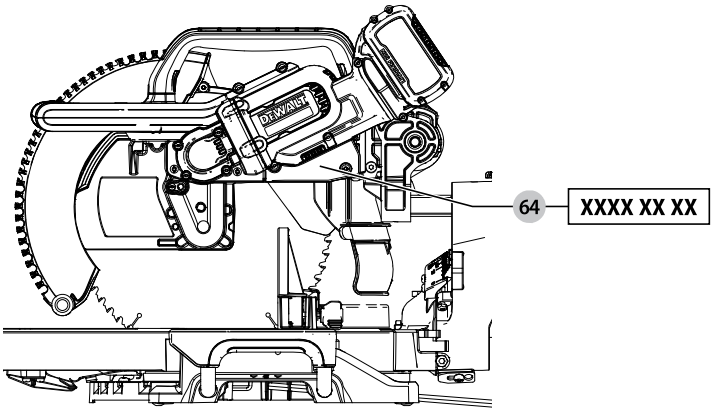

Fig. D

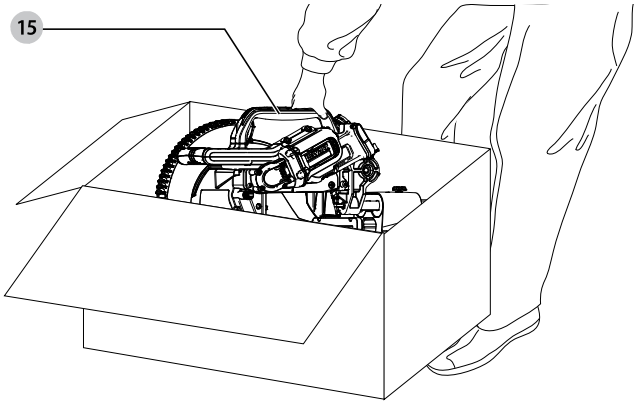

Fig. E

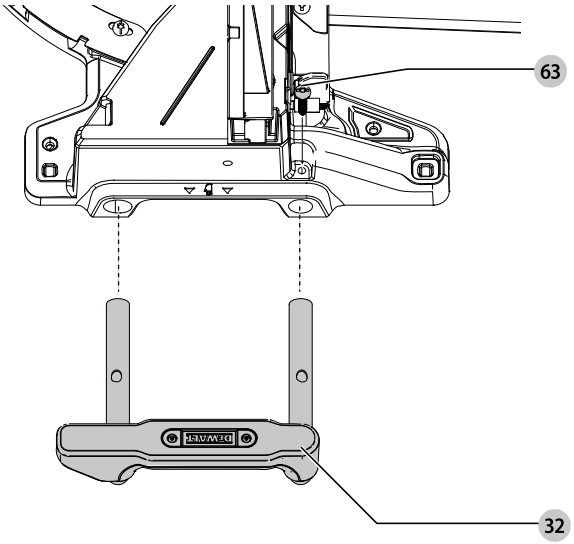

Fig. F

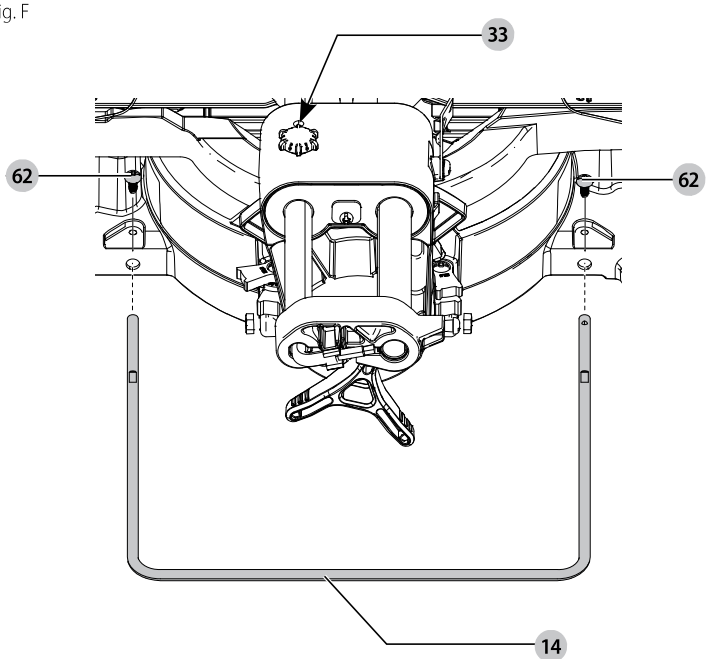

Fig. G

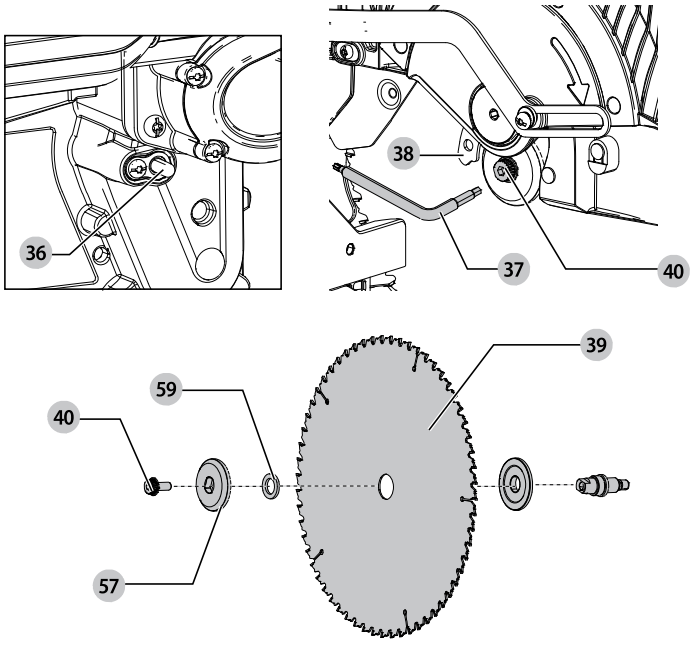

Fig. H

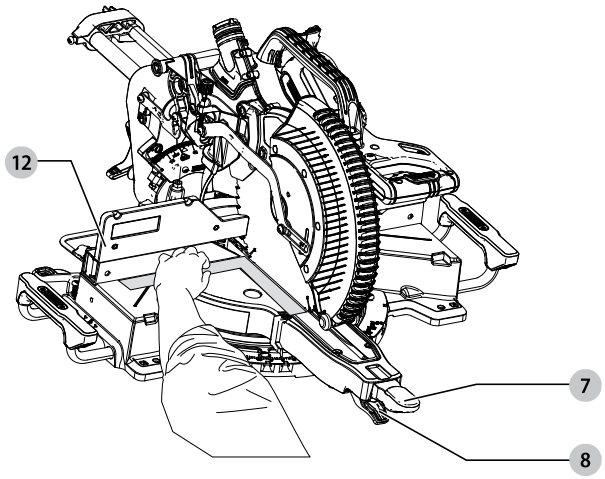

Fig. I

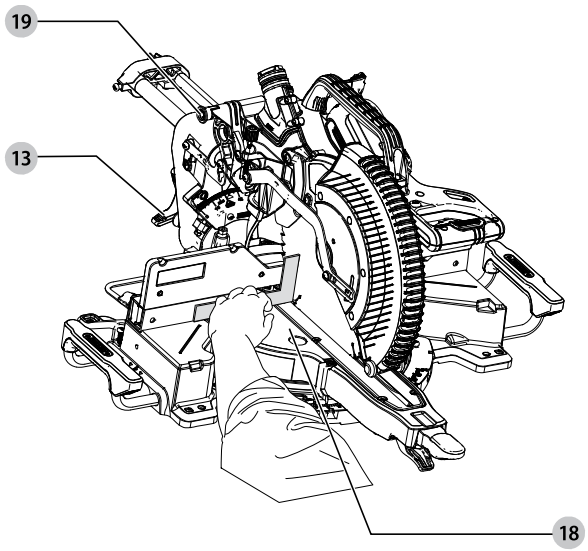

Fig. J

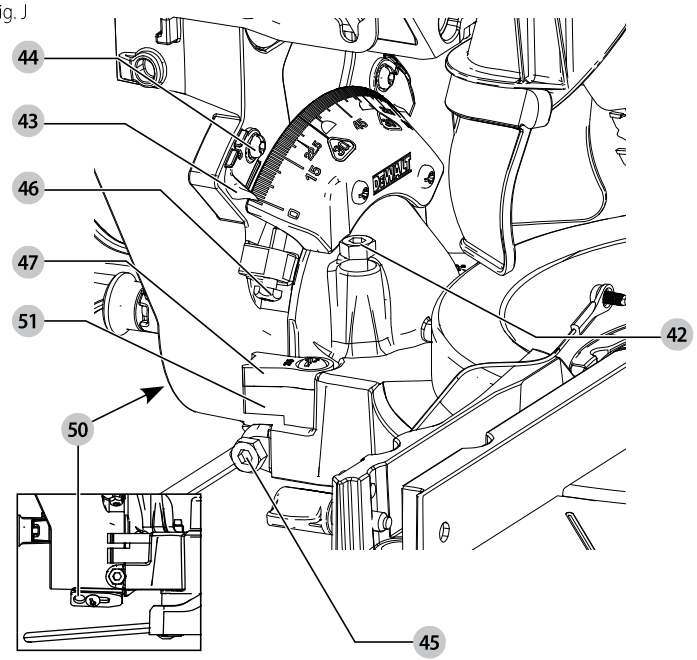

Fig. K

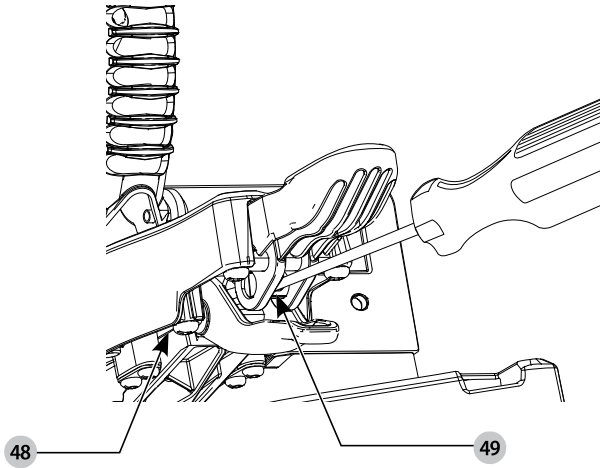

Fig. L1

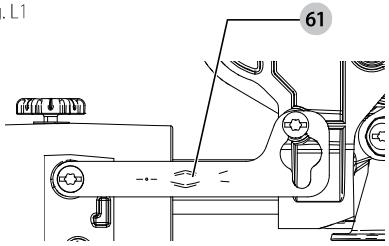

Fig. L2

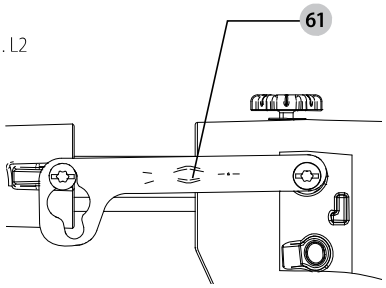

Fig. L3

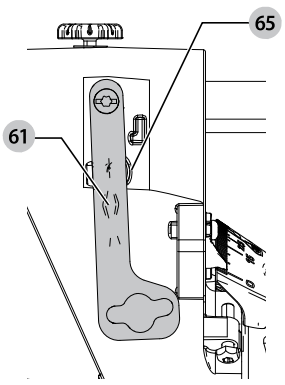

Fig. M

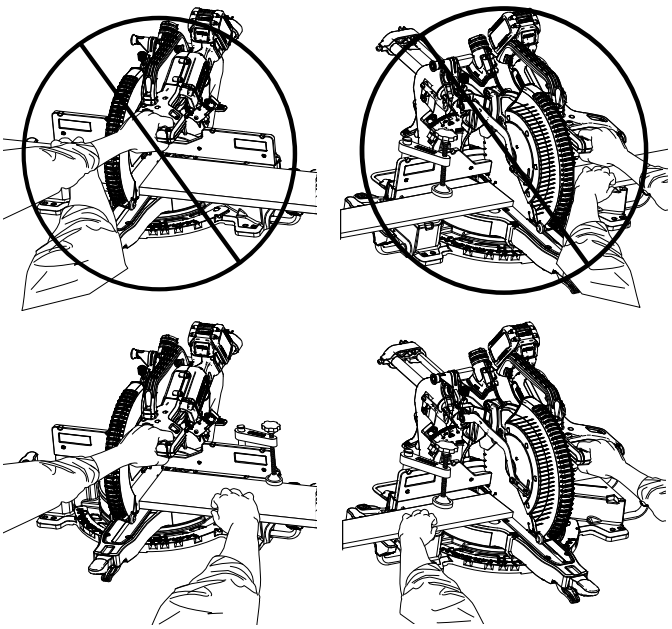

Fig. N

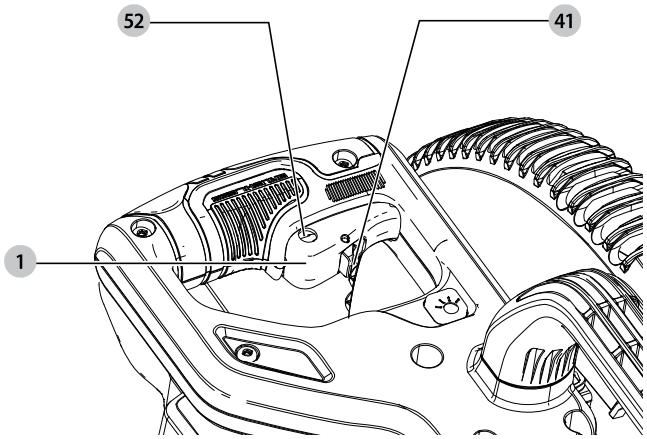

Fig. O

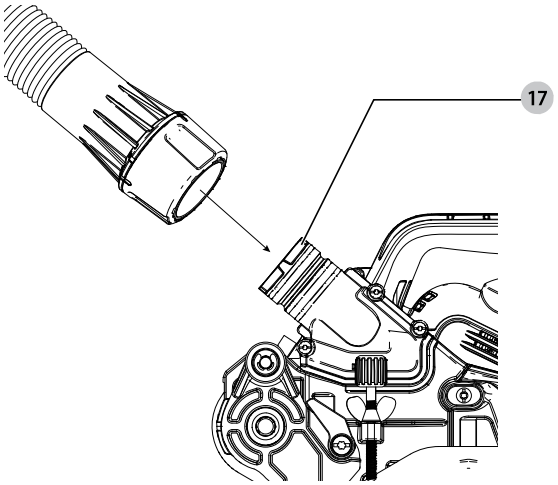

Fig. P

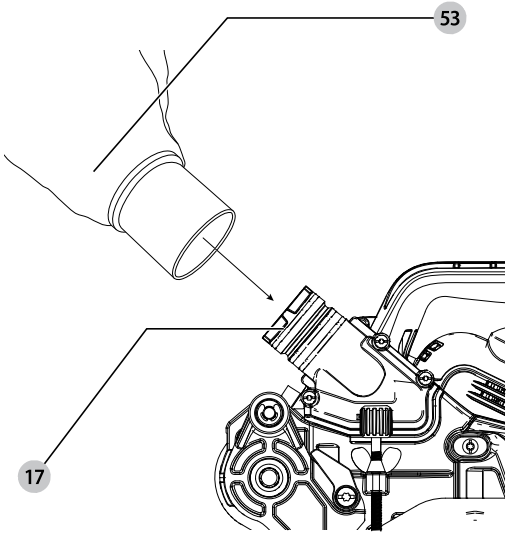

Fig. Q

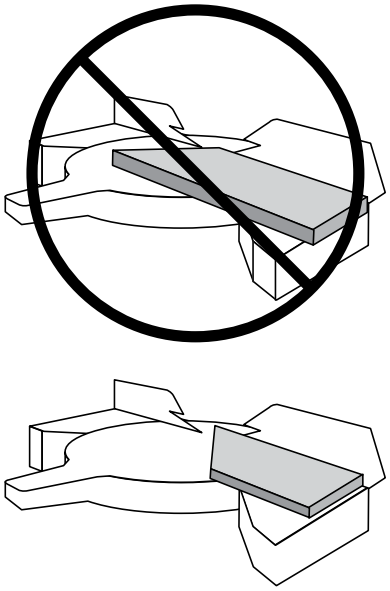

Fig. R

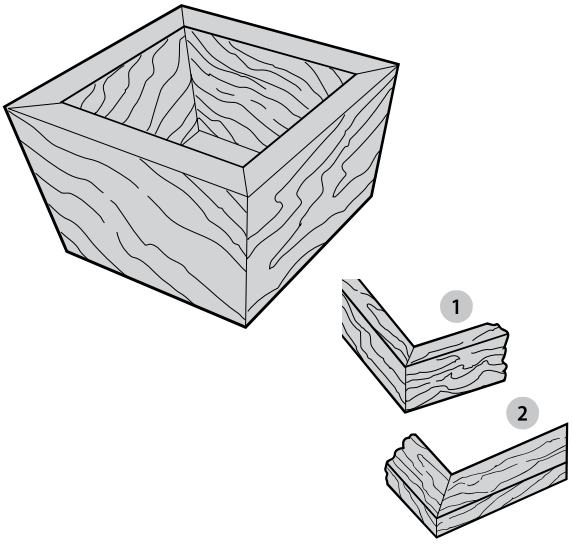

Fig. S

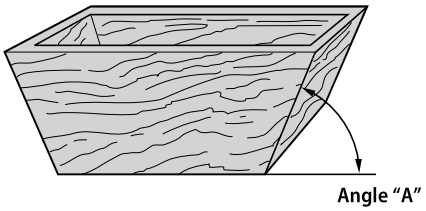

Fig. T

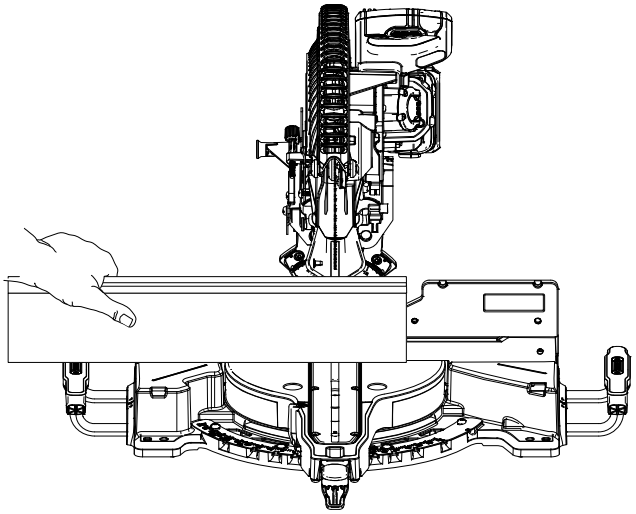

Fig. U

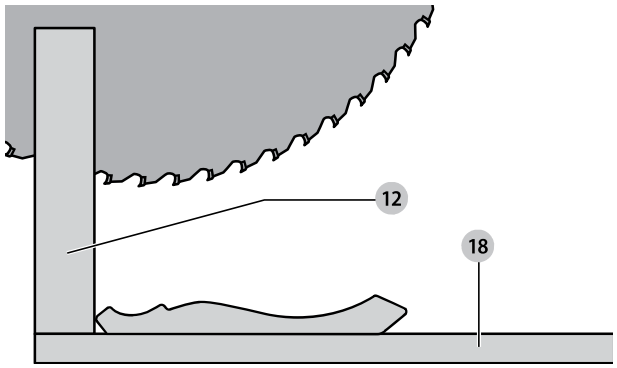

Fig. V

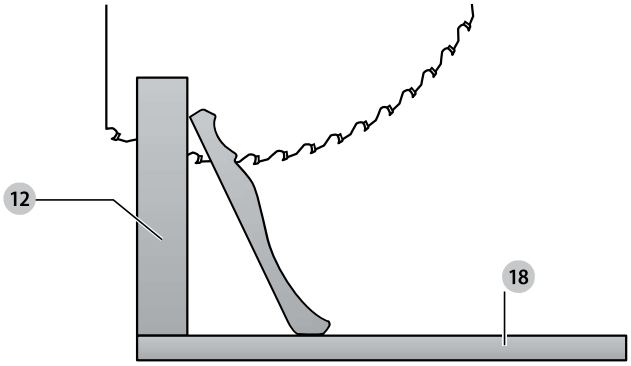

Fig. W

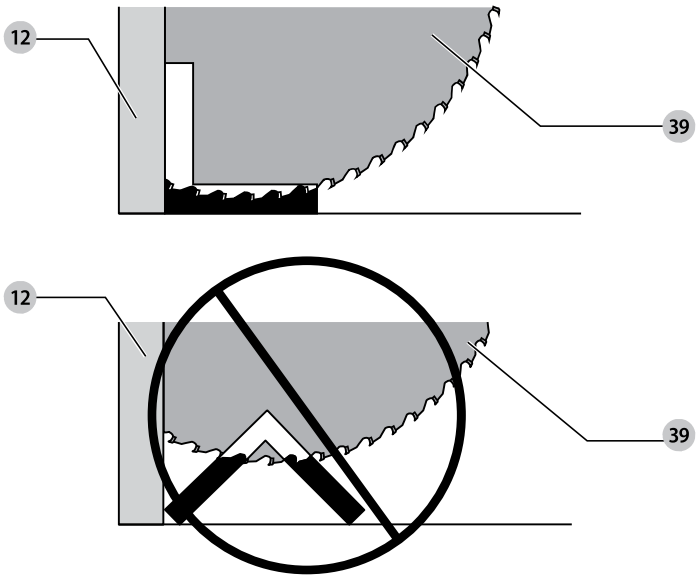

Fig. X

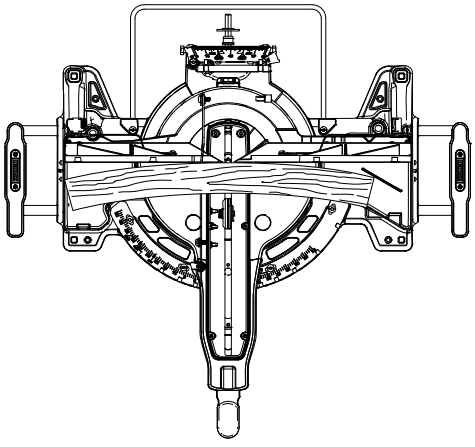

Fig. Y

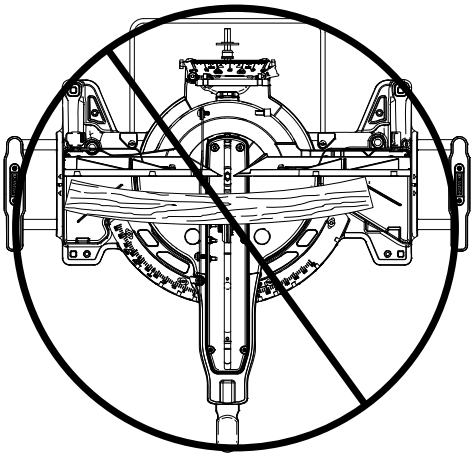

Fig. Z

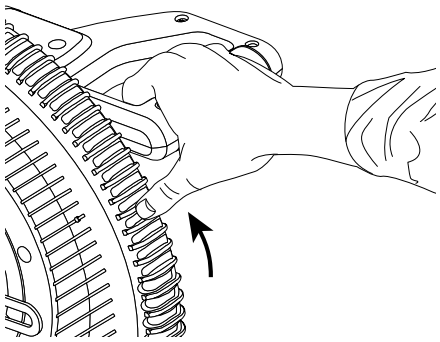

GERINGSSAV
DCS781

Du har valgt et DEWALT-værktøj. Mange års erfaring, ihærdig produktudvikling og innovation gør DEWALT til én af de mest pålidelige partnere for professionelle brugere af elværktøj.

Tekniske data

		DCS781
Spænding	V_{DC}	54
Type		20
Batteritype		Li-ion
Klingediameter	mm	305
Klingeboring	mm	30
Klingens kropstykkelse	mm	1,6
Maks. savsnittykkelse	mm	2,2
Maks. klingeomdrejningstal	min^{-1}	3800
Maks. krydssnitkapacitet 90°	mm	310
Maks. geringskapacitet 45°	mm	219
Maks. skæredybde 90°	mm	112
Maks. dybde af fastværsnit 45°	mm	50
Geringssnit (maks. positioner)	venstre	50°
	højre	60°
Skråsnit (maks. positioner)	venstre	49°
	højre	49°
0 ° gering		
Resulterende bredde ved fodliste maks. højde 165 mm	mm	19
Resulterende bredde ved maks. højde 112 mm	mm	278
Resulterende højde ved maks. bredde 310 mm	mm	90
45 ° gering venstre		
Resulterende bredde ved maks. højde 112 mm	mm	197
Resulterende højde ved maks. bredde 219 mm	mm	90
45 ° gering højre		
Resulterende bredde ved maks. højde 112 mm	mm	197
Resulterende højde ved maks. bredde 219 mm	mm	90
45 ° smig venstre		
Resulterende bredde ved maks. højde 60 mm	mm	278
Resulterende højde ved maks. bredde 310 mm	mm	54
45 ° smig højre		
Resulterende bredde ved maks. højde 50 mm	mm	296
Resulterende højde ved maks. bredde 310 mm	mm	40
Automatisk klingebremsetid	s	<5
Sender til trådløs værktøjskontrol		
Frekvensbånd	MHz	433
Maks. effekt (EIRP)	mW	0,03
Vægt (uden batteripakke)	kg	23,2

Støjværdier og/eller vibrationsværdier (triax vector sum) i henhold til EN62841- 3-9:		
L_{PA} (emissionslydtrykniveau)	dB (A)	94,4
L_{WA} (lydeffektniveau)	dB (A)	106,4
K (usikkerhed med hensyn til det givne lydniveau)	dB (A)	2,5

Vibrations- og/eller støjemissionsniveauet, der er angivet i dette vejledningsark, er målt i overensstemmelse med en standardiseret test, der er angivet i EN62841 og kan anvendes til at sammenligne et værktøj med et andet. Det kan anvendes til en foreløbig eksponeringsvurdering.

ADVARSEL: *Det angivne vibrations- og/eller støjemissionsniveau repræsenterer værktøjets primære anvendelsesområder. Hvis værktøjet anvendes til andre formål, med andet tilbehør eller vedligeholdes dårligt, kan vibrations- og/eller støjemissionen imidlertid variere. Det kan markant forøge eksponeringsniveauet over den samlede arbejdsperiode.*

Et estimat af eksponeringsniveauet for vibration og/eller støj bør også tage højde for de gange, hvor der slukkes for værktøjet, eller når det kører, men ikke bruges til arbejdet. Det kan markant mindske eksponeringsniveauet over den samlede arbejdsperiode.

Identificér yderligere sikkerhedsforanstaltninger for at beskytte operatøren mod vibrationens og/eller støjens indvirkning, som f.eks.: at vedligeholde værktøjet og tilbehøret, hold hænderne varme (relevant for vibration), organisering af arbejdsmønstre.

EF-overensstemmelseserklæring

Maskindirektiv og radioudstyrsdirektiv

CE

Geringssav
DCS781

DEWALT erklærer, at produkterne beskrevet under ***Tekniske data*** er udformet i overensstemmelse med: 2006/42/EF, EN62841-1:2015 +AC:2015; EN62841-3-9:2020 + A11:2020.

Disse produkter er endvidere i overensstemmelse med direktiv 2014/53/EU; 2014/30/EU og 2011/65/EU. For yderligere oplysninger, kontakt venligst DEWALT på følgende adresse eller se på bagsiden af vejledningen.

Undertegnede er ansvarlig for kompilering af den tekniske fil og udsteder denne erklæring på vegne af DEWALT.

Markus Rompel
Vicepræsident for teknik, PTE-Europe
DEWALT, Richard-Klinger-Straße 11, 65510, Idstein, Tyskland
29.04.2022

ADVARSEL: *For at reducere risikoen for personskade bør du læse betjeningsvejledningen.*

Definitioner: Sikkerhedsråd

Nedenstående definitioner beskriver sikkerhedsniveauet for hvert signalord. Læs vejledningen og læg mærke til disse symboler.

FARE: *Angiver en overhængende farlig situation, der - hvis den ikke undgås - **vil** resultere i **dødsfald eller alvorlig personskade**.*

ADVARSEL: *Angiver en mulig farlig situation, der - hvis den ikke undgås - **kan** resultere i **dødsfald eller alvorlig personskade**.*

FORSIGTIG: *Angiver en mulig farlig situation, der - hvis den ikke undgås - **kan** resultere i **mindre eller moderat personskade**.*

BEMÆRK: *Angiver en handling, der **ikke er forbundet med personskade**, men som - hvis den ikke undgås - **kan** resultere i **ejendomsskade**.*

Betyder fare for elektrisk stød.

Betyder risiko for brand.

GENERELLE SIKKERHEDSADVARSLER FOR ELVÆRKTØJER

ADVARSEL: Læs alle sikkerhedsadvarsler, instruktioner, illustrationer og specifikationer, der følger med dette elværktøj. *Manglende overholdelse af alle nedenstående instruktioner kan medføre elektrisk stød, brand og/eller alvorlige kvæstelser.*

GEM ALLE ADVARSLER OG INSTRUKTIONER FOR FREMTIDIG REFERENCE.

Termen "elværktøj" i advarslerne refererer til dit netstrømsdrevne elværktøj (ledning) eller batteridrevne (trådløse) elværktøj.

1) Sikkerhed i arbejdsområdet

a) ***Sørg for, at arbejdsområdet er rent og godt oplyst.*** *Rodede eller mørke områder giver anledning til ulykker.*

b) ***Brug ikke elværktøjer i områder med eksplosionsfare som f.eks. nær letantændelige væsker, gasser eller støv.*** *Elværktøjer danner gnister, der kan antænde støv eller dampe.*

c) ***Hold børn og omkringstående på afstand, når der anvendes elektrisk værktøj.*** *Distraktioner kan medføre, at du mister kontrollen.*

2) El-sikkerhed

a) ***Stik på elektrisk værktøj skal passe til stikkontakten. Stikket må aldrig modificeres på nogen måde. Undlad at bruge adapterstik sammen med (jordforbundet) elektrisk værktøj.*** *Umodificerede stik og dertil passende stikkontakter reducerer risikoen for elektrisk stød.*

b) ***Undgå kropskontakt med jordforbundne overflader, såsom rør, radiatorer, komfurer og køleskabe.*** *Der er øget risiko for elektrisk stød, hvis din krop er jordforbundet.*

c) ***Undlad at udsætte elektrisk værktøj for regn eller våde forhold.*** *Hvis der trænger vand ind i et elektrisk værktøj, øges risikoen for elektrisk stød.*

d) ***Udsæt ikke ledning for overlast. Brug aldrig ledningen til at bære, trække værktøjet eller trække det ud af stikkontakten. Hold ledningen borte fra varme, olie, skarpe kanter og bevægelige dele.*** *Beskadigede eller sammenfiltrede ledninger øger risikoen for elektrisk stød.*

e) ***Når elektrisk værktøj benyttes udendørs, skal der anvendes en forlængerledning, som er egnet til udendørs brug.*** *Brug af en ledning, der er egnet til udendørs brug, reducerer risikoen for elektrisk stød.*

MITRE SAW
DCS781

You have chosen a DEWALT tool. Years of experience, thorough product development and innovation make DEWALT one of the most reliable partners for professional power tool users.

Technical Data

		DCS781
Voltage	V_{DC}	54
Type		20
Battery type		Li-Ion
Blade diameter	mm	305
Blade bore	mm	30
Blade body thickness	mm	1.6
Max. kerf thickness	mm	2.2
Max. blade speed	min^{-1}	3800
Max. cross-cut capacity 90°	mm	310
Max. mitre capacity 45°	mm	219
Max. depth of cut 90°	mm	112
Max. depth of bevel cross-cut 45°	mm	50
Mitre (max. positions)	left	50°
	right	60°
Bevel (max. positions)	left	49°
	right	49°
0 ° mitre		
Resulting width at baseboard max. height 165mm	mm	19
Resulting width at max height 112 mm	mm	278
Resulting height at max width 310 mm	mm	90
45 ° mitre left		
Resulting width at max. height 112mm	mm	197
Resulting height at max. width 219mm	mm	90
45 ° mitre right		
Resulting width at max. height 112mm	mm	197
Resulting height at max. width 219mm	mm	90
45 ° bevel left		
Resulting width at max. height 60 mm	mm	278
Resulting height at max. width 310 mm	mm	54
45 ° bevel right		
Resulting width at max. height 50mm	mm	296
Resulting height at max. width 310 mm	mm	40
Automatic blade brake time	s	<5
Wireless tool control transmitter		
Frequency band	MHz	433
Max. power (EIRP)	mW	0.03
Weight (without battery pack)	kg	23.2

Noise values and/or vibration values (triax vector sum) according to EN62841-3-9:		
L_{PA} (emission sound pressure level)	dB(A)	94.4
L_{WA} (sound power level)	dB(A)	106.4
K (uncertainty for the given sound level)	dB(A)	2.5

The vibration and/or noise emission level given in this information sheet has been measured in accordance with a standardised test given in EN62841 and may be used to compare one tool with another. It may be used for a preliminary assessment of exposure.

WARNING: *The declared vibration and/or noise emission level represents the main applications of the tool. However if the tool is used for different applications, with different accessories or poorly maintained, the vibration and/or noise emission may differ. This may significantly increase the exposure level over the total working period.*

An estimation of the level of exposure to vibration and/or noise should also take into account the times when the tool is switched off or when it is running but not actually doing the job. This may significantly reduce the exposure level over the total working period.

Identify additional safety measures to protect the operator from the effects of vibration and/or noise such as: maintain the tool and the accessories, keep the hands warm (relevant for vibration), organisation of work patterns.

EC-Declaration of Conformity

Machinery Directive and Radio Equipment Directive

CE

Mitre Saw
DCS781

DEWALT declares that these products described under ***Technical Data*** are in compliance with: 2006/42/EC, EN62841-1:2015 +AC:2015; EN62841-3-9:2020 + A11:2020.

These products also comply with Directive, 2014/53/EU; 2014/30/EU and 2011/65/EU. For more information, please contact DEWALT at the following address or refer to the back of the manual.

The undersigned is responsible for compilation of the technical file and makes this declaration on behalf of DEWALT.



Markus Rompel
Vice President of Engineering, PTE-Europe
DEWALT, Richard-Klinger-Straße 11,
65510, Idstein, Germany
29.04.2022

DECLARATION OF CONFORMITY
THE SUPPLY OF MACHINERY (SAFETY) REGULATIONS 2008 AND RADIO EQUIPMENT REGULATION 2017

UK CA

Mitre Saw
DCS781

DEWALT declares that these products described under "technical data" are in compliance with:
The Supply of Machinery (Safety) Regulations, 2008, S.I. 2008/1597 (as amended),
EN62841-1:2015 +AC:2015; EN62841-3-9:2020 + A11:2020.

These products conform to the following UK Regulations
Radio Equipment Regulation 2017, S.I.2017/1206 (as amended)
Electromagnetic Compatibility Regulations, 2016, S.I.2016/1091 (as amended).
The Restriction of the Use of Certain Hazardous Substances in Electrical and Electronic Equipment Regulations 2012, S.I. 2012/3032 (as amended).

For more information, please contact DEWALT at the following address or refer to the back of the manual.

The undersigned is responsible for compilation of the technical file and makes this declaration on behalf of DEWALT.

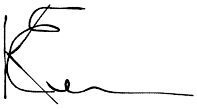

Karl Evans
Vice President Professional Power Tools EANZ GTS
DEWALT UK, 270 Bath Road, Slough
SL1 4DX
England
29.04.2022

WARNING: *To reduce the risk of injury, read the instruction manual.*

Definitions: Safety Guidelines

The definitions below describe the level of severity for each signal word. Please read the manual and pay attention to these symbols.

DANGER: *Indicates an imminently hazardous situation which, if not avoided,* ***will*** *result in* ***death or serious injury****.*

WARNING: *Indicates a potentially hazardous situation which, if not avoided,* ***could*** *result in* ***death or serious injury****.*

CAUTION: *Indicates a potentially hazardous situation which, if not avoided,* ***may*** *result in* ***minor or moderate injury****.*

NOTICE: *Indicates a practice* ***not related to personal injury*** *which, if not avoided,* ***may*** *result in* ***property damage****.*

Denotes risk of electric shock.

Denotes risk of fire.

Batteries				Chargers/Charge Times (Minutes)**								
Cat #	V_{DC}	Ah	Weight (kg)	DCB104	DCB107	DCB112	DCB113	DCB115	DCB116	DCB117	DCB118	DCB132
DCB546	18/54	6.0/2.0	1.08	60	270	170	140	90	80	40	60	90
DCB547	18/54	9.0/3.0	1.46	75*	420	270	220	135*	110*	60	75*	135*
DCB548	18/54	12.0/4.0	1.46	120	540	350	300	180	150	80	120	180
DCB549	18/54	15.0/5.0	2.12	125	730	450	380	230	170	90	125	230

Date code 201811475B or later

GENERAL POWER TOOL SAFETY WARNINGS

WARNING: Read all safety warnings, instructions, illustrations and specifications provided with this power tool. *Failure to follow all instructions listed below may result in electric shock, fire and/or serious injury.*

SAVE ALL WARNINGS AND INSTRUCTIONS FOR FUTURE REFERENCE.

The term "power tool" in the warnings refers to your mains-operated (corded) power tool or battery-operated (cordless) power tool.

1) Work Area Safety

a) ***Keep work area clean and well lit.*** *Cluttered or dark areas invite accidents.*

b) ***Do not operate power tools in explosive atmospheres, such as in the presence of flammable liquids, gases or dust.*** *Power tools create sparks which may ignite the dust or fumes.*

c) ***Keep children and bystanders away while operating a power tool.*** *Distractions can cause you to lose control.*

2) Electrical Safety

a) ***Power tool plugs must match the outlet. Never modify the plug in any way. Do not use any adapter plugs with earthed (grounded) power tools.*** *Unmodified plugs and matching outlets will reduce risk of electric shock.*

b) ***Avoid body contact with earthed or grounded surfaces, such as pipes, radiators, ranges and refrigerators.*** *There is an increased risk of electric shock if your body is earthed or grounded.*

c) ***Do not expose power tools to rain or wet conditions.*** *Water entering a power tool will increase the risk of electric shock.*

d) ***Do not abuse the cord. Never use the cord for carrying, pulling or unplugging the power tool. Keep cord away from heat, oil, sharp edges or moving parts.*** *Damaged or entangled cords increase the risk of electric shock.*

e) ***When operating a power tool outdoors, use an extension cord suitable for outdoor use.*** *Use of a cord suitable for outdoor use reduces the risk of electric shock.*

f) ***If operating a power tool in a damp location is unavoidable, use a ground fault circuit interrupter (GFCI) protected supply.*** *Use of a GFCI reduces the risk of electric shock.*

3) Personal Safety

a) ***Stay alert, watch what you are doing and use common sense when operating a power tool. Do not use a power tool while you are tired or under the influence of drugs, alcohol or medication.*** *A moment of inattention while operating power tools may result in serious personal injury.*

b) ***Use personal protective equipment. Always wear eye protection.*** *Protective equipment such as a dust mask, non-skid safety shoes, hard hat, or hearing protection used for appropriate conditions will reduce personal injuries.*

c) ***Prevent unintentional starting. Ensure the switch is in the off-position before connecting to power source and/or battery pack, picking up or carrying the tool.*** *Carrying power tools with your finger on the switch or energizing power tools that have the switch on invites accidents.*

d) ***Remove any adjusting key or wrench before turning the power tool on.*** *A wrench or a key left attached to a rotating part of the power tool may result in personal injury.*

e) ***Do not overreach. Keep proper footing and balance at all times.*** *This enables better control of the power tool in unexpected situations.*

f) ***Dress properly. Do not wear loose clothing or jewelry. Keep your hair, clothing and gloves away from moving parts.*** *Loose clothes, jewelry or long hair can be caught in moving parts.*

g) ***If devices are provided for the connection of dust extraction and collection facilities, ensure these are connected and properly used.*** *Use of dust collection can reduce dust-related hazards.*

h) ***Do not let familiarity gained from frequent use of tools allow you to become complacent and ignore tool safety principles.*** *A careless action can cause severe injury within a fraction of a second.*

4) Power Tool Use and Care

a) ***Do not force the power tool. Use the correct power tool for your application.*** *The correct power tool will do the job better and safer at the rate for which it was designed.*

b) ***Do not use the power tool if the switch does not turn it on and off.*** *Any power tool that cannot be controlled with the switch is dangerous and must be repaired.*

c) ***Disconnect the plug from the power source and/or remove the battery pack, if detachable, from the power tool before making any adjustments, changing accessories, or storing power tools.*** *Such preventive safety measures reduce the risk of starting the power tool accidentally.*

d) ***Store idle power tools out of the reach of children and do not allow persons unfamiliar with the power tool or these instructions to operate the power tool.*** *Power tools are dangerous in the hands of untrained users.*

e) ***Maintain power tools and accessories. Check for misalignment or binding of moving parts, breakage of parts and any other condition that may affect the power tool's operation. If damaged, have the power tool repaired before use.*** *Many accidents are caused by poorly maintained power tools.*

f) ***Keep cutting tools sharp and clean.*** *Properly maintained cutting tools with sharp cutting edges are less likely to bind and are easier to control.*

g) ***Use the power tool, accessories and tool bits etc. in accordance with these instructions, taking into account the working conditions and the work to be performed.*** *Use of the power tool for operations different from those intended could result in a hazardous situation.*

h) ***Keep handles and grasping surfaces dry, clean and free from oil and grease.*** *Slippery handles and grasping surfaces do not allow for safe handling and control of the tool in unexpected situations.*

5) Battery Tool Use and Care

a) ***Recharge only with the charger specified by the manufacturer.*** *A charger that is suitable for one type of battery pack may create a risk of fire when used with another battery pack.*

b) ***Use power tools only with specifically designated battery packs.*** *Use of any other battery packs may create a risk of injury and fire.*

c) ***When battery pack is not in use, keep it away from other metal objects, like paper clips, coins, keys, nails, screws or other small metal objects, that can make a connection from one terminal to another.*** *Shorting the battery terminals together may cause burns or a fire.*

d) ***Under abusive conditions, liquid may be ejected from the battery; avoid contact. If contact accidentally occurs, flush with water. If liquid contacts eyes, additionally seek medical help.*** *Liquid ejected from the battery may cause irritation or burns.*

e) ***Do not use a battery pack or tool that is damaged or modified.*** *Damaged or modified batteries may exhibit unpredictable behavior resulting in fire, explosion or risk of injury.*

f) ***Do not expose a battery pack or tool to fire or excessive temperature.*** *Exposure to fire or temperature above 130 °C may cause explosion.*

g) ***Follow all charging instructions and do not charge the battery pack or tool outside the temperature range specified in the instructions.*** *Charging improperly or at temperatures outside the specified range may damage the battery and increase the risk of fire.*

6) Service

a) ***Have your power tool serviced by a qualified repair person using only identical replacement parts.*** *This will ensure that the safety of the power tool is maintained.*

b) ***Never service damaged battery packs.*** *Service of battery packs should only be performed by the manufacturer or authorized service providers.*

Safety Instructions for Mitre Saws

a) ***Mitre saws are intended to cut wood or wood-like products, they cannot be used with abrasive cut-off wheels for cutting ferrous material such as bars, rods, studs, etc.*** *Abrasive dust causes moving parts such as the lower guard to jam. Sparks from abrasive cutting will burn the lower guard, the kerf insert and other plastic parts.*

b) ***Use clamps to support the workpiece whenever possible. If supporting the workpiece by hand, you must always keep your hand at least 100 mm from either side of the saw blade. Do not use this saw to cut pieces that are too small to be securely clamped or held by hand.*** *If your hand is placed too close to the saw blade, there is an increased risk of injury from blade contact.*

c) ***The workpiece must be stationary and clamped or held against both the fence and the table. Do not feed the workpiece into the blade or cut "freehand" in any way.*** *Unrestrained or moving workpieces could be thrown at high speeds, causing injury.*

d) *Push the saw through the workpiece. Do not pull the saw through the workpiece. To make a cut, raise the saw head and pull it out over the workpiece without cutting, start the motor, press the saw head down and push the saw through the workpiece. Cutting on the pull stroke is likely to cause the saw blade to climb on top of the workpiece and violently throw the blade assembly towards the operator.*

e) ***Never cross your hand over the intended line of cutting either in front or behind the saw blade.*** *Supporting the workpiece "cross handed" i.e. holding the workpiece to the right of the saw blade with your left hand or vice versa is very dangerous.*

f) ***Do not reach behind the fence with either hand closer than 100 mm from either side of the saw blade, to remove wood scraps, or for any other reason while the blade is spinning.*** *The proximity of the spinning saw blade to your hand may not be obvious and you may be seriously injured.*

g) ***Inspect your workpiece before cutting. If the workpiece is bowed or warped, clamp it with the outside bowed face toward the fence. Always make certain that there is no gap between the workpiece, fence and table along the line of the cut.***

Bent or warped workpieces can twist or shift and may cause binding on the spinning saw blade while cutting. There should be no nails or foreign objects in the workpiece.

h) ***Do not use the saw until the table is clear of all tools, wood scraps, etc., except for the workpiece.*** *Small debris or loose pieces of wood or other objects that contact the revolving blade can be thrown with high speed.*

i) ***Cut only one workpiece at a time.*** *Stacked multiple workpieces cannot be adequately clamped or braced and may bind on the blade or shift during cutting.*

j) ***Ensure the mitre saw is mounted or placed on a level, firm work surface before use.*** *A level and firm work surface reduces the risk of the mitre saw becoming unstable.*

k) ***Plan your work. Every time you change the bevel or mitre angle setting, make sure the fence will not interfere with the blade or the guarding system.*** *Without turning the tool "ON" and with no workpiece on the table, move the saw blade through a complete simulated cut to assure there will be no interference or danger of cutting the fence.*

l) ***Provide adequate support such as table extensions, saw horses, etc. for a workpiece that is wider or longer than the table top.*** *Workpieces longer or wider than the mitre saw table can tip if not securely supported. If the cut-off piece or workpiece tips, it can lift the lower guard or be thrown by the spinning blade.*

m) ***Do not use another person as a substitute for a table extension or as additional support.*** *Unstable support for the workpiece can cause the blade to bind or the workpiece to shift during the cutting operation pulling you and the helper into the spinning blade.*

n) ***The cut-off piece must not be jammed or pressed by any means against the spinning saw blade.*** *If confined, i.e. using length stops, the cut-off piece could get wedged against the blade and thrown violently.*

o) ***Always use a clamp or a fixture designed to properly support round material such as rods or tubing.*** *Rods have a tendency to roll while being cut, causing the blade to "bite" and pull the work with your hand into the blade.*

p) ***Let the blade reach full speed before contacting the workpiece.*** *This will reduce the risk of the workpiece being thrown.*

q) ***If the workpiece or blade becomes jammed, turn the mitre saw off. Wait for all moving parts to stop and disconnect the plug from the power source and/ or remove the battery pack. Then work to free the jammed material.*** *Continued sawing with a jammed workpiece could cause loss of control or damage to the mitre saw.*

r) ***After finishing the cut, release the switch, hold the saw head down and wait for the blade to stop before removing the cut-off piece.*** *Reaching with your hand near the coasting blade is dangerous.*

s) ***Hold the handle firmly when making an incomplete cut or when releasing the switch before the saw head is completely in the down position.*** *The braking action of the saw may cause the saw head to be suddenly pulled downward, causing a risk of injury.*

Additional Safety Rules for Mitre Saws

WARNING: *Do not allow familiarity (gained from frequent use of your saw) to replace safety rules. Always remember that a careless fraction of a second is sufficient to inflict severe injury.*

WARNING: *Never modify the power tool or any part of it. Damage or personal injury could result.*

WARNING: *Do not insert battery into unit until complete instructions are read and understood*

- ***DO NOT OPERATE THIS MACHINE*** *until it is completely assembled and installed according to the instructions. A machine incorrectly assembled can cause serious injury.*
- ***OBTAIN ADVICE*** *from your supervisor, instructor, or another qualified person if you are not thoroughly familiar with the operation of this machine. Knowledge is safety..*
- ***MAKE CERTAIN*** *the blade rotates in the correct direction. The teeth on the blade should point in the direction of rotation as marked on the saw.*
- ***TIGHTEN ALL CLAMP HANDLES****, knobs and levers prior to operation. Loose clamps can cause parts or the workpiece to be thrown at high speeds.*
- ***AVOID UNCONTROLLED RELEASE OF THE SAW HEAD FROM FULLY DOWN POSITION.*** *Otherwise, there is a risk that the machine will tip over.*
- ***BE SURE*** *all blade and blade clamps are clean, recessed sides of blade clamps are against blade and arbor screw is tightened securely. Loose or improper blade clamping may result in damage to the saw and possible personal injury.*
- ***DO NOT OPERATE ON ANYTHING OTHER THAN THE DESIGNATED VOLTAGE*** *for the saw. Overheating, damage to the tool and personal injury may occur.*
- ***DO NOT WEDGE ANYTHING AGAINST THE FAN*** *to hold the motor shaft. Damage to tool and possible personal injury may occur.*
- ***NEVER CUT FERROUS METALS*** *or masonry. Either of these can cause the carbide tips to fly off the blade at high speeds causing serious injury.*
- ***NEVER HAVE ANY PART OF YOUR BODY IN LINE WITH THE PATH OF THE SAW BLADE.*** *Personal injury will occur.*
- ***NEVER APPLY BLADE LUBRICANT TO A RUNNING BLADE.*** *Applying lubricant could cause your hand to move into the blade resulting in serious injury.*
- ***DO NOT*** *place either hand in the blade area when the saw is connected to the power source. Inadvertent blade activation may result in serious injury.*
- ***NEVER REACH AROUND OR BEHIND THE SAW BLADE.*** *A blade can cause serious injury.*
- ***DO NOT REACH UNDERNEATH THE SAW*** *unless it is unplugged and turned off. Contact with saw blade may cause personal injury.*
- ***SECURE THE MACHINE TO A STABLE SUPPORTING SURFACE.*** *Vibration can possibly cause the machine to slide, walk, or tip over, causing serious injury.*
- ***USE ONLY CROSSCUT SAW BLADES*** *recommended for mitre saws. For best results, do not use carbide tipped blades with hook angles in excess of 7 degrees. Do not use blades with deep gullets. These can deflect and contact the guard, and can cause damage to the machine and/or serious injury.*
- ***USE ONLY BLADES OF THE CORRECT SIZE AND TYPE*** *specified for this tool to prevent damage to the machine and/or serious injury (complying with EN847:2017).*
- ***MAXIMUM SPEED OF THE SAW BLADE*** *shall always be greater than or at least equal to the speed marked on the rating plate of the tool.*
- ***THE SAW BLADE DIAMETER*** *must be in accordance with the markings on rating plate of the tool.*
- ***INSPECT BLADE FOR CRACKS*** *or other damage prior to operation. A cracked or damaged blade can come apart and pieces can be thrown at high speeds, causing serious injury. Replace cracked or damaged blades immediately.*
- ***CLEAN THE BLADE AND BLADE CLAMPS*** *prior to operation. Cleaning the blade and blade clamps allows you to check for any damage to the blade or blade clamps. A cracked or damaged blade or blade clamp can come apart and pieces can be thrown at high speeds, causing serious injury.*
- ***DO NOT USE WARPED BLADES.*** *Check to see if the blade runs true and is free from vibration. A vibrating blade can cause damage to the machine and/or serious injury.*
- ***DO NOT*** *use lubricants or cleaners (particularly spray or aerosol) in the vicinity of the plastic guard. The polycarbonate material used in the guard is subject to attack by certain chemicals.*
- ***KEEP GUARD IN PLACE*** *and in working order.*
- ***ALWAYS USE THE KERF PLATE AND REPLACE THIS PLATE WHEN DAMAGED.*** *Small chip accumulation under the saw may interfere with the saw blade or may cause instability of workpiece when cutting.*
- ***USE ONLY BLADE CLAMPS SPECIFIED FOR THIS TOOL*** *to prevent damage to the machine and/or serious injury.*
- ***CLEAN THE MOTOR AIR SLOTS*** *of chips and sawdust. Clogged motor air slots can cause the machine to overheat, damaging the machine and possibly causing a short which could cause serious injury.*
- ***NEVER LOCK THE SWITCH IN THE "ON" POSITION.*** *Severe personal injury may result.*
- ***NEVER STAND ON TOOL.*** *Serious injury could occur if the tool is tipped or if the cutting tool is unintentionally contacted.*
- ***NEVER LEAVE TOOL RUNNING UNATTENDED. TURN POWER OFF.*** *Don't leave tool until it comes to a complete stop.*
- ***MAKE SURE*** *to use the correct saw blade for the material to be cut.*
- ***DO NOT USE ABRASIVE WHEELS OR BLADES.*** *The excessive heat and abrasive particles generated by them may damage the saw and cause personal injury.*

WARNING: *Cutting plastics, sap coated wood, and other materials may cause melted material to accumulate on the blade tips and the body of the saw blade, increasing the risk of blade overheating and binding while cutting.*

WARNING: ALWAYS *use safety glasses. Everyday eyeglasses are NOT safety glasses. Also use face or dust mask if cutting operation is dusty. ALWAYS WEAR CERTIFIED SAFETY EQUIPMENT:*

WARNING: *Some dust created by power sanding, sawing, grinding, drilling, and other construction activities contains chemicals known to the State of California to cause cancer, birth defects or other reproductive harm. Some examples of these chemicals are:*

- *lead from lead-based paints,*
- *crystalline silica from bricks and cement and other masonry products, and*
- *arsenic and chromium from chemically-treated lumber.*

Your risk from these exposures varies, depending on how often you do this type of work. To reduce your exposure to these chemicals: work in a well ventilated area, and work with approved safety equipment, such as those dust masks that are specially designed to filter out microscopic particles.

- ***Avoid prolonged contact with dust from power sanding, sawing, grinding, drilling, and other construction activities. Wear protective clothing and wash exposed areas with soap and water.*** *Allowing dust to get into your mouth, eyes, or lay on the skin may promote absorption of harmful chemicals.*

WARNING: *Use of this tool can generate and/or disperse dust, which may cause serious and permanent respiratory or other injury. Always use approved respiratory protection appropriate for the dust exposure. Direct particles away from face and body.*

WARNING: Always wear proper personal hearing protection during use. *Under some conditions and duration of use, noise from this product may contribute to hearing loss.*

- ***Be aware of the following factors influencing exposure to noise:***
  - *Use saw blades designed to reduce the emitted noise,*
  - *Use only well sharpened saw blades, and*
  - *Use specifically designed noise-reduction saw blades.*
- ***Air vents often cover moving parts and should be avoided.*** *Loose clothes, jewelry or long hair can be caught in moving parts.*

Residual Risks

The following risks are inherent to the use of saws:

- *Injuries caused by touching the rotating parts.*

In spite of the application of the relevant safety regulations and the implementation of safety devices, certain residual risks cannot be avoided. These are:

- *Impairment of hearing.*
- *Risk of accidents caused by the uncovered parts of the rotating saw blade.*

- *Risk of injury when changing the blade.*
- *Risk of squeezing fingers when opening the guards.*
- *Health hazards caused by breathing dust developed when sawing wood, especially oak, beech and MDF.*

The following factors increase the risk of breathing problems:

- *No dust extractor connected when sawing wood.*
- *Insufficient dust extraction caused by uncleaned exhaust filters.*

SAVE THESE INSTRUCTIONS

Chargers

DEWALT chargers require no adjustment and are designed to be as easy as possible to operate.

Electrical Safety

The electric motor has been designed for one voltage only. Always check that the battery pack voltage corresponds to the voltage on the rating plate. Also make sure that the voltage of your charger corresponds to that of your mains.

Your DEWALTcharger is double insulated in accordance with EN60335; therefore no earth wire is required.

If the supply cord is damaged, it must be replaced only by DEWALT or an authorised service organisation.

Mains Plug Replacement (U.K. & Ireland Only)

If a new mains plug needs to be fitted:

- *Safely dispose of the old plug.*
- *Connect the brown lead to the live terminal in the plug.*
- *Connect the blue lead to the neutral terminal.*

WARNING: *No connection is to be made to the earth terminal.*

Follow the fitting instructions supplied with good quality plugs. Recommended fuse: 3 A.

Using an Extension Cable

An extension cord should not be used unless absolutely necessary. Use an approved extension cable suitable for the power input of your charger (see ***Technical Data***). The minimum conductor size is 1 mm^2; the maximum length is 30 m.

When using a cable reel, always unwind the cable completely.

Important Safety Instructions for All Battery Chargers

SAVE THESE INSTRUCTIONS: This manual contains important safety and operating instructions for compatible battery chargers (refer to ***Technical Data***).

- *Before using charger, read all instructions and cautionary markings on charger, battery pack, and product using battery pack.*

WARNING: *Shock hazard. Do not allow any liquid to get inside charger. Electric shock may result.*

WARNING: *We recommend the use of a residual current device with a residual current rating of 30mA or less.*

CAUTION: *Burn hazard. To reduce the risk of injury, charge only DEWALT rechargeable batteries. Other types of batteries may burst causing personal injury and damage.*

CAUTION: *Children should be supervised to ensure that they do not play with the appliance.*

NOTICE: *Under certain conditions, with the charger plugged into the power supply, the exposed charging contacts inside the charger can be shorted by foreign material. Foreign materials of a conductive nature such as, but not limited to, steel wool, aluminum foil or any buildup of metallic particles should be kept away from charger cavities. Always unplug the charger from the power supply when there is no battery pack in the cavity. Unplug charger before attempting to clean.*

- ***DO NOT attempt to charge the battery pack with any chargers other than the ones in this manual.*** *The charger and battery pack are specifically designed to work together.*
- ***These chargers are not intended for any uses other than charging DEWALT rechargeable batteries.*** *Any other uses may result in risk of fire, electric shock or electrocution.*
- ***Do not expose charger to rain or snow.***
- ***Pull by plug rather than cord when disconnecting charger.*** *This will reduce risk of damage to electric plug and cord.*
- ***Make sure that cord is located so that it will not be stepped on, tripped over, or otherwise subjected to damage or stress.***
- ***Do not use an extension cord unless it is absolutely necessary.*** *Use of improper extension cord could result in risk of fire,electric shock, or electrocution.*
- ***Do not place any object on top of charger or place the charger on a soft surface that might block the ventilation slots and result in excessive internal heat.*** *Place the charger in a position away from any heat source. The charger is ventilated through slots in the top and the bottom of the housing.*
- ***Do not operate charger with damaged cord or plug—****have them replaced immediately.*
- ***Do not operate charger if it has received a sharp blow, been dropped, or otherwise damaged in any way.*** *Take it to an authorised service centre.*
- ***Do not disassemble charger; take it to an authorised service centre when service or repair is required.*** *Incorrect reassembly may result in a risk of electric shock, electrocution or fire.*
- *In case of damaged power supply cord, the supply cord must be replaced immediately by the manufacturer, its service agent or similar qualified person to prevent any hazard.*
- ***Disconnect the charger from the outlet before attempting any cleaning. This will reduce the risk of electric shock.*** *Removing the battery pack will not reduce this risk.*
- ***NEVER*** *attempt to connect two chargers together.*
- ***The charger is designed to operate on standard 230V household electrical power. Do not attempt to use it on any other voltage.*** *This does not apply to the vehicular charger.*

Charging a Battery (Fig. B)

1. Plug the charger into an appropriate outlet before inserting battery pack.
2. Insert the battery pack 3 into the charger, making sure the battery pack is fully seated in the charger. The red (charging) light will blink repeatedly indicating that the charging process has started.
3. The completion of charge will be indicated by the red light remaining ON continuously. The battery pack is fully charged and may be used at this time or left in the charger. To remove the battery pack from the charger, push the battery release button 4 on the battery pack.

NOTE: To ensure maximum performance and life of lithium-ion battery packs, charge the battery pack fully before first use.

Charger Operation

Refer to the indicators below for the charge status of the battery pack.

Charge Indicators	
Charging	— — — —
Fully Charged	———
Hot/Cold Pack Delay*	— — —|———

*The red light will continue to blink, but a yellow indicator light will be illuminated during this operation. Once the battery pack has reached an appropriate temperature, the yellow light will turn off and the charger will resume the charging procedure.

The compatible charger(s) will not charge a faulty battery pack. The charger will indicate faulty battery by refusing to light.

NOTE: This could also mean a problem with a charger.

If the charger indicates a problem, take the charger and battery pack to be tested at an authorised service centre.

Hot/Cold Pack Delay

When the charger detects a battery pack that is too hot or too cold, it automatically starts a Hot/Cold Pack Delay, suspending charging until the battery pack has reached an appropriate temperature. The charger then automatically switches to the pack charging mode. This feature ensures maximum battery pack life.

A cold battery pack will charge at a slower rate than a warm battery pack. The battery pack will charge at that slower rate throughout the entire charging cycle and will not return to maximum charge rate even if the battery pack warms.

The DCB118 charger is equipped with an internal fan designed to cool the battery pack. The fan will turn on automatically when the battery pack needs to be cooled. Never operate the charger if the fan does not operate properly or if ventilation slots are blocked. Do not permit foreign objects to enter the interior of the charger.

Electronic Protection System

XR Li-Ion tools are designed with an Electronic Protection System that will protect the battery pack against overloading, overheating or deep discharge.

The tool will automatically turn off if the Electronic Protection System engages. If this occurs, place the lithium-ion battery pack on the charger until it is fully charged.

Wall Mounting

These chargers are designed to be wall mountable or to sit upright on a table or work surface. If wall mounting, locate the charger within reach of an electrical outlet, and away from a corner or other obstructions which may impede air flow. Use the back of the charger as a template for the location of the mounting screws on the wall. Mount the charger securely using drywall screws (purchased separately) at least 25.4 mm long with a screw head diameter of 7–9 mm, screwed into wood to an optimal depth leaving approximately 5.5 mm of the screw exposed. Align the slots on the back of the charger with the exposed screws and fully engage them in the slots.

Charger Cleaning Instructions

WARNING: Shock hazard. Disconnect the charger from the AC outlet before cleaning*. Dirt and grease may be removed from the exterior of the charger using a cloth or soft non-metallic brush. Do not use water or any cleaning solutions. Never let any liquid get inside the tool; never immerse any part of the tool into a liquid.*

Battery Packs

Important Safety Instructions for All Battery Packs

When ordering replacement battery packs, be sure to include catalogue number and voltage.

The battery pack is not fully charged out of the carton. Before using the battery pack and charger, read the safety instructions below. Then follow charging procedures outlined.

READ ALL INSTRUCTIONS

- ***Do not charge or use battery in explosive atmospheres, such as in the presence of flammable liquids, gases or dust.*** *Inserting or removing the battery from the charger may ignite the dust or fumes.*

- ***Never force battery pack into charger. Do not modify battery pack in any way to fit into a non-compatible charger as battery pack may rupture causing serious personal injury.***
- *Charge the battery packs only in DEWALT chargers.*
- ***DO NOT** splash or immerse in water or other liquids.*
- ***Do not store or use the tool and battery pack in locations where the temperature may fall below 4 ˚C (39.2 ˚F) (such as outside sheds or metal buildings in winter), or reach or exceed 40 ˚C (104 ˚F) (such as outside sheds or metal buildings in summer).***
- ***Do not incinerate the battery pack even if it is severely damaged or is completely worn out.** The battery pack can explode in a fire. Toxic fumes and materials are created when lithium-ion battery packs are burned.*
- ***If battery contents come into contact with the skin, immediately wash area with mild soap and water.** If battery liquid gets into the eye, rinse water over the open eye for 15 minutes or until irritation ceases. If medical attention is needed, the battery electrolyte is composed of a mixture of liquid organic carbonates and lithium salts.*
- ***Contents of opened battery cells may cause respiratory irritation.** Provide fresh air. If symptoms persists, seek medical attention.*

***WARNING:** Burn hazard. Battery liquid may be flammable if exposed to spark or flame.*

***WARNING:** Never attempt to open the battery pack for any reason. If battery pack case is cracked or damaged, do not insert into charger. Do not crush, drop or damage battery pack. Do not use a battery pack or charger that has received a sharp blow, been dropped, run over or damaged in any way (i.e., pierced with a nail, hit with a hammer, stepped on). Electric shock or electrocution may result. Damaged battery packs should be returned to service centre for recycling.*

***WARNING: Fire hazard. Do not store or carry the battery pack so that metal objects can contact exposed battery terminals.** For example, do not place the battery pack in aprons, pockets, tool boxes, product kit boxes, drawers, etc., with loose nails, screws, keys, etc.*

***CAUTION: When not in use, place tool on its side on a stable surface where it will not cause a tripping or falling hazard.** Some tools with large battery packs will stand upright on the battery pack but may be easily knocked over.*

Transportation

***WARNING: Fire hazard.** Transporting batteries can possibly cause fire if the battery terminals inadvertently come in contact with conductive materials. When transporting batteries, make sure that the battery terminals are protected and well insulated from materials that could contact them and cause a short circuit. **NOTE:** Lithium-ion batteries should not be put in checked baggage.*

DEWALT batteries comply with all applicable shipping regulations as prescribed by industry and legal standards which include UN Recommendations on the Transport of Dangerous Goods; International Air Transport Association (IATA) Dangerous Goods Regulations, International Maritime Dangerous Goods (IMDG) Regulations, and the European Agreement Concerning The International Carriage of Dangerous Goods by Road (ADR). Lithium-ion cells and batteries have been tested to section 38.3 of the UN Recommendations on the Transport of Dangerous Goods Manual of Tests and Criteria.

In most instances, shipping a DEWALT battery pack will be excepted from being classified as a fully regulated Class 9 Hazardous Material. In general, only shipments containing a lithium-ion battery with an energy rating greater than 100 Watt Hours (Wh) will require being shipped as fully regulated Class 9. All lithium-ion batteries have the Watt Hour rating marked on the pack. Furthermore, due to regulation complexities, DEWALT does not recommend air shipping lithium-ion battery packs alone regardless of Watt Hour rating. Shipments of tools with batteries (combo kits) can be air shipped as excepted if the Watt Hour rating of the battery pack is no greater than 100 Wh.

Regardless of whether a shipment is considered excepted or fully regulated, it is the shipper's responsibility to consult the latest regulations for packaging, labeling/marking and documentation requirements.

The information provided in this section of the manual is provided in good faith and believed to be accurate at the time the document was created. However, no warranty, expressed or implied, is given. It is the buyer's responsibility to ensure that its activities comply with the applicable regulations.

Transporting the FLEXVOLT™ Battery

The DEWALT FLEXVOLT™ battery has two modes: **Use** and **Transport**.

Use Mode: When the FLEXVOLT™ battery stands alone or is in a DEWALT 18V product, it will operate as an 18V battery. When the FLEXVOLT™ battery is in a 54V or a 108V (two 54V batteries) product, it will operate as a 54V battery.

Transport Mode: When the cap is attached to the FLEXVOLT™ battery, the battery is in Transport mode. Keep the cap for shipping.

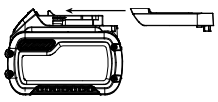

When in Transport mode, strings of cells are electrically disconnected within the pack resulting in 3 batteries with a lower Watt hour (Wh) rating as compared to 1 battery with a higher Watt hour rating. This increased quantity of 3 batteries with the lower Watt hour rating can exempt the pack from certain shipping regulations that are imposed upon the higher Watt hour batteries.

For example, the Transport Wh rating might indicate 3 x 36 Wh, meaning 3 batteries of 36 Wh each. The Use Wh rating might indicate 108 Wh (1 battery implied).

Example of Use and Transport Label Marking

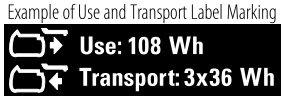

Storage Recommendations

1. The best storage place is one that is cool and dry away from direct sunlight and excess heat or cold. For optimum battery performance and life, store battery packs at room temperature when not in use.
2. For long storage, it is recommended to store a fully charged battery pack in a cool, dry place out of the charger for optimal results.

Labels on Charger and Battery Pack

In addition to the pictographs used in this manual, the labels on the charger and the battery pack may show the following pictographs:



Read instruction manual before use.



See ***Technical Data*** for charging time.



Do not probe with conductive objects.



Do not charge damaged battery packs.



Do not expose to water.



Have defective cords replaced immediately



Charge only between 4 ˚C and 40 ˚C.



Only for indoor use.



Discard the battery pack with due care for the environment.



Charge battery packs only with designated DEWALT chargers. Charging battery packs other than the designated DEWALT batteries with a DEWALT charger may make them burst or lead to other dangerous situations.



Do not incinerate the battery pack.



USE (without transport cap). Example: Wh rating indicates 108 Wh (1 battery with 108 Wh).



TRANSPORT (with built-in transport cap). Example: Wh rating indicates 3 x 36 Wh (3 batteries of 36 Wh).

Battery Type

The DCS781 operates on a 54 volt battery pack.

These battery packs may be used: DCB546, DCB547, DCB548. Refer to ***Technical Data*** for more information.

Package Contents

The package contains:

1 DCS781 mitre saw
1 Stabilizer bar
1 DEWALT 305 mm diameter saw blade
2 Base extensions
1 Material clamp
1 Charger (Kit only)
1 Battery (Kit only)

In bag:

1 Dust bag
1 Blade wrench
1 Instruction manual

- *Check for damage to the tool, parts or accessories which may have occurred during transport.*
- *Take the time to thoroughly read and understand this manual prior to operation.*

Markings on Tool

The following pictograms are shown on the tool:



Read instruction manual before use.



Wear ear protection.



Wear eye protection.


Keep hands away from blade.


Keep hands 100 mm from either side of saw blade.


Do not stare directly into the light source.


Carrying point.

Date Code Position (Fig. C)

The Date Code **64**, which also includes the year of manufacture, is printed into the housing.

2022 XX XX

Year of Manufacture

Description (Fig. A)

WARNING: *Never modify the power tool or any part of it. Damage or personal injury could result.*

1 Trigger switch
2 Operating handle
3 Battery
4 Battery release button
5 Mounting holes
6 Lower guard
7 Mitre lock handle
8 Mitre detent latch
9 Mitre scale
10 Mitre scale screws
11 Hand indentations
12 Fence
13 Bevel lock knob
14 Stabalizer
15 Lifting handle
16 Fence adjustment knob
17 Dust port
18 Table
19 Head lock knob
20 Base
21 XPS On switch
22 Wing nut
23 Vertical material clamp
24 Rails
25 Depth stop
26 Kerf plate
27 Mitre pointer screw
28 0 ° bevel stop
29 Depth adjustment screw
30 Rail lock knob
31 Mitre scale pointer
32 Extension

Intended Use

Your DEWALT cordless compact mitre saw has been designed for professional cutting wood, wood products and plastics. When using the appropriate saw blades, sawing aluminum is also possible. It performs the sawing operations of cross-cutting, bevelling and mitring easily, accurately and safely.

This unit is designed for use with a nominal blade diameter 305 mm carbide tip blade.

DO NOT use under wet conditions or in presence of flammable liquids or gases.

These mitre saws are professional power tools.

DO NOT let children come into contact with the tool. Supervision is required when inexperienced operators use this tool.

WARNING! *Do not use the machine for purposes other than intended.*

- **Young children and the infirm.** This appliance is not intended for use by young children or infirm persons without supervision.
- This product is not intended for use by persons (including children) suffering from diminished physical, sensory or mental abilities; lack of experience, knowledge or skills unless they are supervised by a person responsible for their safety. Children should never be left alone with this product.

Familiarization (Fig. A, D)

Your mitre saw is not fully assembled in the carton. Refer to ***Assembling the Base Extensions*** and ***Assembling the Stabilizer Bar*** sections for assembly instructions. Open the box and lift the saw out by the convenient lifting handle **15**, as shown in Figure D.

Place the saw on a smooth, flat surface such as a workbench or strong table.

Examine Figure A to become familiar with the saw and its various parts. The section on adjustments will refer to these terms and you must know what and where the parts are.

CAUTION: *Pinch Hazard. To reduce the risk of injury, keep thumb underneath the handle when pulling the handle down. The lower guard will move up as the handle is pulled down which could cause pinching.The handle is placed close to the guard for special cuts.*

Press down lightly on the operating handle **2** and pull the head lock knob **19** and rotate 90 degrees. Gently release the downward pressure and hold the arm allowing it to rise to its full height. Use the head lock knob when carrying the saw from one place to another. Always use the lifting handle **15** to transport the saw or the hand indentations **11** shown in Figure A.

Use of CUTLINE™ LED Worklight (Fig. A)

CAUTION: Do not stare into worklight*. Serious eye injury could result.*

NOTE: The battery must be charged and connected to the mitre saw.

The CUTLINE™ LED Worklight can be turned on by the momentary switch **21**. The light will automatically turn off within 20 seconds if the saw is not in use. The light is also activated automatically every time the tool's main trigger **1** is pulled.

To cut through an existing pencil line on a piece of wood, turn on the CUTLINE™ worklight using the momentary switch **21** (not with the main trigger), then pull down on the operating handle **2** to bring the saw blade close to the wood. The shadow of the blade will appear on the wood. This shadow line represents the material that the blade will remove when performing a cut. To correctly locate your cut to the pencil line, align the pencil line with the edge of the blade's shadow. Keep in mind that you may have to adjust the mitre or bevel angles in order to match the pencil line exactly.

Your saw is equipped with a battery monitoring feature. The CUTLINE™ worklight begins to flash when the battery is near the end of its useful charge and/or when the battery is too hot. Charge the battery prior to continuing cutting applications. Refer to **Charging Procedure** under ***Important Safety Instructions for All Battery Chargers*** for battery charging instructions.

Mitre Control (Fig. A)

The mitre lock lever and mitre detent latch allow you to mitre your saw to 60 ° right and 50 ° left. To mitre the saw, lift the mitre lock lever **7**, squeeze the mitre detent latch **8** and move the mitre arm to the angle desired on the mitre scale **9** as shown at the mitre scale pointer **31**. Push down on the mitre lock lever to lock the mitre arm in place.

ASSEMBLY AND ADJUSTMENTS

WARNING: To reduce the risk of serious personal injury, turn machine off and disconnect battery pack before making any adjustments or removing/installing attachments or accessories. *An accidental start-up can cause injury.*

WARNING: *Use only DEWALT battery packs and chargers.*

Assembling the Base Extensions (Fig. E)

WARNING: *Base extensions must be assembled to both sides of the saw's base before using the saw.*

1. The extension **32** should be oriented as shown in Figure E, sliding fully into the U-shaped supports. Do not use the saw without mounted extensions!
2. Clamp the extension's rods against the mitre saw base by inserting the extension screw **63** entirely through and the clamp.
3. Repeat steps 1 and 2 on the other side.

Bench Mounting (Fig. A)

Mounting holes **5** are provided in all 4 feet to facilitate bench mounting, as shown in Figure A. (Two different-sized holes are provided to accommodate different sizes of screws. Use either hole, it is not necessary to use both.) Always mount your saw firmly to a stable surface to prevent movement. To enhance the tool's portability, it can be mounted to a piece of 12.7 mm or thicker plywood which can then be clamped to your work support or moved to other job sites and reclamped.

NOTE: If you elect to mount your saw to a piece of plywood, make sure that the mounting screws don't protrude from the bottom of the wood. The plywood must sit flush on the work support. When clamping the saw to any work surface, clamp only on the clamping bosses where the mounting screw holes are located. Clamping at any other point will surely interfere with the proper operation of the saw.

CAUTION: *To prevent binding and inaccuracy, be sure the mounting surface is not warped or otherwise uneven. If the saw rocks on the surface place a thin piece of material under one saw foot until the saw sits firmly on the mounting surface.*

Assembling the Stabilizer Bar (Fig. F)

Your saw includes one base stabilizer **14** This must be installed before using your saw. Insert the stabilizer into the holes in the back of the unit. Move the stabilizer in or out until it contacts the work surface. Then tighten the screws **62** in the base to fasten the stabilizer.

Changing or Installing a New Saw Blade (Fig. A, G)

WARNING: To reduce the risk of serious personal injury, turn tool off, remove the battery pack, and place lock lever in the transport position before transporting, making any adjustments, cleaning, repairing, or removing/installing attachments or accessories. *An accidental start-up can cause injury.*

WARNING: *To reduce the risk of injury, wear gloves when handling the saw blade.*

CAUTION:

- *Never depress the spindle lock button while the blade is under power or coasting.*
- *Do not cut ferrous metal (containing iron or steel) or masonry or fiber cement product with this mitre saw.*

WARNING! *Be aware the saw blade shall be replaced in the described way only. Only use saw blades as specified in section* **Optional Accessories.**

Removing the Blade (Fig. A, G)

1. Remove battery pack **3** from the saw.
2. Raise the arm to the upper position and raise the lower guard **6** as far as possible.
3. Depress the spindle lock button **36** while carefully rotating the saw blade by hand until the lock engages.
4. Using your finger, pivot the blade bolt plate **38** to gain access to blade bolt head **40**.
5. Keeping the spindle lock button depressed and blade bolt plate pushed out of the way, use the blade wrench **37** provided to loosen blade screw. (Turn clockwise, left-hand threads.) Remove the blade screw.
6. Proceed to remove the outer clamp washer, blade adaptor and saw blade.

Installing a Blade (Fig. A, G)

1. Remove battery pack 3 from the saw.
2. Raise the saw head to the upper position and raise the lower guard 6 as far as possible. Place the blade 39 on the spindle, following by the blade adaptor 59 then outer clamp washer 57. Make sure to match arrow direction on blade with the arrow direction on guard plate.
3. Depress the spindle lock button 36 while carefully rotating the saw blade by hand until the lock engages.
4. Using your finger, push back the blade bolt plate 38 to gain access to blade bolt head 40.
5. Keeping the spindle lock button depressed and blade bolt plate pushed out of the way, use the blade wrench 37 provided to firmly tighten the blade screw. (Turn anti-clockwise, left-hand threads.)

Kerf Plate Replacement (Fig. A)

1. To remove the kerf plate 26, remove the screws holding the kerf plate in place and replace with a new one.
2. Assemble the screws back in by following this sequence: First through the round holes located halfway from the ends, then through the slots at the ends. No adjustment is necessary.

Mitre Scale Adjustment (Fig. A, H)

Unlock the mitre lock handle 7 and swing the mitre arm until the mitre latch 8 locks it at the 0 ° mitre position. Do not lock the mitre lock handle. Place a square against the saw's fence and blade, as shown. (Do not touch the tips of the blade teeth with the square. To do so will cause an inaccurate measurement.) If the saw blade is not exactly perpendicular to the fence 12, loosen the four mitre scale screws 10 that hold the mitre scale and move the mitre lock handle and the scale left or right until the blade is perpendicular to the fence, as measured with the square. Retighten the four screws. Pay no attention to the reading of the mitre pointer at this time.

Mitre Pointer Adjustment (Fig. A)

Unlock the mitre lock handle 7 to move the mitre arm to the zero position. With the mitre lock handle unlocked, squeeze the mitre detent latch 8 and allow the mitre latch to snap into place as you rotate the mitre arm to zero. Observe the mitre pointer 31 and mitre scale 9 shown in Figure A. If the pointer does not indicate exactly zero, loosen the mitre pointer screw 27 holding the pointer in place, reposition the pointer and tighten the screw.

Bevel Square to Table (Fig. A, I, J)

To align the blade square to the table 18, lock the arm in the down position with the lock down pin 19. Place a square against the blade, ensuring the square is not on top of a tooth. Loosen the bevel lock knob 13 and ensure the arm is firmly against the 0 ° bevel stop. Rotate the 0 ° bevel adjustment screw 42 with the 6 mm blade wrench as necessary so that the blade is at 0 ° bevel to the table.

Bevel Pointer (Fig. J)

If the bevel pointer 43 does not indicate zero, loosen the screw 44 that holds it in place and move the pointer as necessary. Ensure the 0 ° bevel is correct and the bevel pointers are set before adjusting any other bevel angle screws.

Adjusting the Bevel Stop to 45 ° Left or Right (Fig. A, J)

To adjust the right 45 ° bevel angle, loosen the bevel lock knob 13 and pull the 0 ° bevel stop and rotate 90 ° to override the 0 ° bevel stop. When the saw is fully to the right, if the bevel pointer does not indicate exactly 45 °, turn the left 45 ° bevel adjustment screw 45 with the 6 mm blade wrench until the bevel pointer indicates 45 °.

To adjust the left 45 ° bevel stop, first loosen the bevel lock knob and tilt the head to the left. If the bevel pointer does not indicate exactly 45 °, turn the right 45 ° bevel adjustment screw 45 until the bevel pointer 43 reads 45 °.

Adjusting the Bevel Stop to 22.5 ° (or 33.9 °) (Fig. A, J)

NOTE: Adjust the bevel angles only after performing the 0 ° bevel angle and bevel pointer adjustment.

- To set the left 22.5 ° bevel angle, flip out the left 22.5 ° bevel pawl 47. Loosen the bevel lock knob 13 and tilt the head fully to the left. If the bevel pointer does not indicate exactly 22.5 °, turn the crown adjustment screw 46 contacting the pawl with a 10 mm wrench until the bevel pointer reads 22.5 °.
- To adjust the right 22.5 ° bevel angle, flip out the right 22.5 ° bevel pawl. Loosen the bevel lock knob and pull the 0 ° bevel stop and rotate 90 degrees to override the 0 ° bevel stop. When the saw is fully to the right, if the bevel pointer does not indicate exactly 22.5 °, turn the crown adjustment screw contacting the pawl with a 10 mm wrench until the bevel pointer indicates exactly 22.5 °.

Fence Adjustment (Fig. A)

In order that the saw can bevel to many bevel positions, one of the fences may have to be adjusted to provide clearance. To adjust each fence, loosen the fence adjustment knob 16 and slide the fence outward. Make a dry run with the saw turned off and check for clearance. Adjust the fence to be as close to the blade as practical to provide maximum workpiece support, without interfering with arm up and down movement. Tighten the fence adjustment knob securely. When the bevel operations are complete, don't forget to relocate the fence.

For certain cuts, it may be desirable to bring the fences closer to the blade. To use this feature, back the fence adjustment knobs out two turns and move the fences closer to the blade past the normal limit, then tighten the fence adjustment knobs to keep the fences in this location. When using this feature, make a dry cut first to ensure the blade does not contact the fences.

NOTE: The tracks of the fences can become clogged with sawdust. If you notice that they are becoming clogged, use a brush or some low pressure air to clear the guide grooves.

Guard Actuation and Visibility (Fig. A, Z)

CAUTION: *Pinch Hazard. To reduce the risk of injury, keep thumb underneath the handle when pulling the handle down. The lower guard will move up as the handle is pulled down which could cause pinching.*

The lower guard 6 on your saw has been designed to automatically uncover the blade when the arm is brought down and to cover the blade when the arm is raised.

The guard can be raised by hand when installing or removing saw blades or for inspection of the saw. NEVER RAISE THE LOWER GUARD MANUALLY UNLESS THE BLADE IS STOPPED.

NOTE: Certain special cuts of large material will require that you manually raise the guard. Refer to **Cutting Large Material** under ***Special Cuts***.

The front section of the guard is louvered for visibility while cutting. Although the louvers dramatically reduce flying debris, they are openings in the guard and safety glasses should be worn at all times when viewing through the louvers.

Rail Guide Adjustment (Fig. A, F)

Periodically check the rails 24 for any play or clearance. The right rail can be adjusted with the rail set screw 33 shown in Figure F. To reduce clearance, use a 4 mm hex wrench and rotate the rail set screw clockwise gradually while sliding the saw head back and forth. Reduce play while maintaining minimum slide force.

Mitre Lock Adjustment (Fig. A, K)

The mitre lock rod 48 should be adjusted if the table of the saw can be moved when the mitre lock handle 7 is locked (down). To adjust the mitre lock 49, put the mitre lock handle in the unlocked (up) position. Using a slotted screwdriver, adjust the lock rod in 1/8 clockwise turn increments to increase the lock force. To ensure the mitre lock is functioning properly, re-lock the mitre lock handle to a non-detent mitre angle – for example , 34 ° - and make sure the table will not rotate.

Transporting the Saw (Fig. A)

WARNING: To reduce the risk of serious personal injury, turn tool off, remove the battery pack, and place lock lever in the transport position before transporting, making any adjustments, cleaning, repairing, or removing/installing attachments or accessories. *An accidental start-up can cause injury.*

WARNING: To reduce the risk of serious personal injury, ALWAYS lock the rail lock knob 30, mitre lock lever 7, bevel lock knob 13, head lock knob 19 and fence adjustment knobs 16 , before transporting saw.

In order to conveniently carry the mitre saw from place to place, a lifting handle 15 has been included on the top of the saw arm and hand indentations 11 in the base.

Head Lock Knob (Fig. A)

WARNING: The head lock knob should be used ONLY when carrying or storing the saw. *NEVER use the headlock knob for any cutting operation.*

To lock the saw head in the down position, push the head down, rotate head lock knob 19 90 ° and the spring loaded pin will lock in and release the saw head. This will hold the saw head safely down for moving the saw from place to place.

To release, press the saw head down, pull out the head lock knob and rotate 90 °.

FEATURES AND CONTROLS

WARNING: To reduce the risk of serious personal injury, turn tool off, remove the battery pack, and place lock lever in the transport position before transporting, making any adjustments, cleaning, repairing, or removing/installing attachments or accessories. *An accidental start-up can cause injury.*

Bevel Lock Knob (Fig. A)

The bevel lock knob 13 allows you to bevel the saw 49 ° left or right. To adjust the bevel setting, turn the knob counterclockwise. The saw head bevels easily to the left or to the right once in the 0 ° bevel override knob 28 is in the 0 ° bevel override position. To tighten, turn the bevel lock knob clockwise.

0 ° Bevel Override (Fig. A)

The bevel stop overrideallows you to bevel the saw to the right past the 0 ° mark.

When engaged, the saw will automatically stop at 0 ° when brought up from the left. To temporarily move past 0 ° to the right, pull the 0 ° bevel stop 28, rotate 90 ° (either clockwise or counterclockwise) and let go for the spring loaded pin to lock in.

To return the bevel to 0 ° bevel stop, pull the bevel lock knob, rotate 90 ° (either clockwise or counterclockwise) and let go for the spring loaded pin will lock in.

45 ° Bevel Stop Override (Fig. J)

There are two bevel stop override levers 50, one on each side of the saw. To bevel the saw, left or right, past 45 °, push the 45 ° bevel override lever rearward. When in the rearward position, the saw can bevel past these stops. When the 45 ° stops are needed, pull the 45 ° bevel override lever forward.

Crown Bevel Pawls (Fig. J)

When cutting crown molding laying flat, your saw is equipped to accurately and rapidly set a crown stop, left or right (refer to ***Instructions for Cutting Crown Molding Laying Flat and Using the Compound Features***). The crown bevel pawl 51 can be rotated to contact the crown adjustment screw 46. The saw is factory set to be used for typical crown in North America (52/38), but can be reversed to cut non-typical (45/45) crown. To reverse the crown

bevel pawl, remove the retaining screw, the 22.5 ° bevel pawl and the 30 ° crown bevel pawl. Flip the crown bevel pawl so the 33.9 ° ◓ is facing up. Reattach the screw to secure the 22.5 ° bevel pawl and the crown bevel pawl. The accuracy setting will not be affected.

22.5 ° Bevel Pawls (Fig. J)

Your saw is equipped to rapidly and accurately set a 22.5 ° bevel, left or right. The 22.5 ° bevel pawl **47** can be rotated to contact the crown adjustment screw.

Rail Lock Knob (Fig. A)

The rail lock knob **30** allows you to lock the saw head firmly to keep it from sliding on the rails. This is necessary when making certain cuts or when transporting the saw.

Depth Stop (Fig. A)

The depth stop **25** allows the depth of cut of the blade to be limited. The stop is useful for applications such as grooving and tall vertical cuts. Rotate the depth stop forward and adjust the depth adjustment screw **29** to set the desired depth of cut. To secure the adjustment, tighten the wing nut **22**. Rotating the depth stop to the rear of the saw will bypass the depth stop feature. If the depth adjustment screw is too tight to loosen by hand, the provided blade wrench can be used to loosen the screw.

Slide Lock Transport Lever (Fig. L1–L3)

Slide Lock Position (Fig. L1)

The slide lock transport lever **61** in forward location locks saw for maximize vertical cutting capacity.

Transport Position (Fig. L2)

The slide lock transport lever **61** in rear location locks saw in the transport position to secure the saw head during transport and storage. Recommended for relocating or carrying the saw.

Stow Position (Fig. L3)

When not in use, the slide lock transport lever **61** can be placed in a stow position. The slide lock lever locks in place using an indent on the back of the lever that slides up the ramp and falls into the cast pocket **65**. To unlock the lever, slightly pull the lever till it clears out of the cast pocket and rotate clockwise.

Automatic Electric Brake

Your saw is equipped with an automatic electric blade brake which stops the saw blade within 5 seconds of trigger release. This is not adjustable.

On occasion, there may be a delay after trigger release to brake engagement. On rare occasions, the brake may not engage at all and the blade will coast to a stop.

If a delay or "skipping" occurs, turn the saw on and off 4 or 5 times. If the condition persists, have the tool serviced by an authorized DEWALT service center.

Always be sure the blade has stopped before removing it from the kerf. The brake is not a substitute for guards or for ensuring your own safety by giving the saw your complete attention.

Wireless Tool Control (Fig. A)

CAUTION: *Read all saftey warnings, instruction and specifications of the appliance which is paired with the tool.*

Your tool is equipped with a Wireless Tool Control transmitter which allows your tool to be wirelessly paired with another Wireless Tool Control device, such as a dust extractor.

To pair your tool using Wireless Tool Control, press and hold the trigger switch **1** on the tool and the Wireless Tool Control pairing button on the seperate device. An LED on the seperate device will let you know when your tool has been successfully paired.

Prior to Operation

- Install the base extensions to both sides of the saw's base. Refer to ***Assembling the Base Extensions*** section.
- Check the protective belt cover for damage and the proper functioning of the lower guard.
- Make sure to use the kerf plate. Do not operate the machine if the kerf slot is wider than 12 mm.
- Install the appropriate saw blade. Do not use excessively worn blades. The maximum rotation speed of the tool must not exceed that of the saw blade.
- Make sure all locking knobs and clamp handles are tight.
- Use personal protective equipment and connect the saw to an external dust extractor.
- Although this saw will cut wood and many nonferrous materials, these operating instructions refer to the cutting of wood only. The same guidelines apply to the other materials. Do not cut ferrous (iron and steel) materials, fibre cement or masonry with this saw!
- Do not attempt to cut excessively small pieces.
- Secure the workpiece.
- Allow the blade to cut freely. Do not force.
- Allow the motor to reach full speed before cutting.

OPERATION

Instructions for Use

WARNING: *Always observe the safety instructions and applicable regulations.*

WARNING: To reduce the risk of serious personal injury, turn tool off and disconnect battery pack before making any adjustments or removing/installing attachments or accessories. *An accidental start-up can cause injury.*

Installing and Removing the Battery Pack (Fig. A)

WARNING: *Ensure the tool/appliance is in the off position before inserting the battery pack.*

NOTE: For best results, make sure your battery pack is fully charged.

To install the battery pack **3** into the tool handle, align the battery pack with the rails inside the tool's handle and slide it into the handle until the battery pack is firmly seated in the tool and ensure that it does not disengage.

To remove the battery pack from the tool, press the release button **4** and firmly pull the battery pack out of the tool handle. Insert it into the charger as described in the charger section of this manual.

Body and Hand Position (Fig. M)

WARNING: *To reduce the risk of serious personal injury,* ***ALWAYS*** *use proper hand position as shown.*

WARNING: *To reduce the risk of serious personal injury,* ***ALWAYS*** *hold securely in anticipation of a sudden reaction.*

Proper positioning of your body and hands when operating the mitre saw will make cutting easier, more accurate and safer. Never place hands near cutting area. Place hands no closer than 100 mm from the blade. Hold the workpiece tightly to the table and the fence when cutting. Keep hands in position until the trigger has been released and the blade has completely stopped. ALWAYS MAKE DRY RUNS (UNPOWERED) BEFORE FINISH CUTS SO THAT YOU CAN CHECK THE PATH OF THE BLADE. DO NOT CROSS ARMS, AS SHOWN IN FIGURE M.

Keep both feet firmly on the floor and maintain proper balance. As you move the mitre arm left and right, follow it and stand slightly to the side of the saw blade. Sight through the guard louvers when following a pencil line.

Trigger Switch (Fig. N)

To turn the saw on, push the lock-off lever **41** to the left, then depress the trigger switch **1**. The saw will run while the switch is depressed. Allow the blade to spin up to full operating speed before making the cut. To turn the saw off, release the switch. Allow the blade to stop before raising the saw head. There is no provision for locking the switch on. A hole **52** is provided in the trigger for insertion of a padlock to lock the switch off.

Always be sure the blade has stopped before removing it from the kerf.

Dust Extraction (Fig. O)

WARNING: To reduce the risk of serious personal injury, turn tool off, remove the battery pack, and place lock lever in the transport position before transporting, making any adjustments, cleaning, repairing, or removing/installing attachments or accessories. *An accidental start-up can cause injury.*

CAUTION: Never operate this saw unless the dust bag or DEWALT dust extractor is in place. *Wood dust may create a breathing hazard.*

Dust from materials such as lead-containing coatings and some wood types, can be harmful to one's health. Breathing-in the dust can cause allergic reactions and/or lead to respiratory infections of the user or bystanders. Certain dust, such as oak or beech dust, is considered carcinogenic, especially in connection with wood treatment additives.

Observe the relevant regulations in your country for the materials to be worked. The vacuum cleaner must be suitable for the material being worked.

When vacuuming dry dust that is especially detrimental to health or is carcinogenic, use a dust class M vacuum cleaner.

Your saw has a built-in dust port **17** that allows an Airlock™ compatible dust collection system to be connected.

To Attach the Dust Bag (Fig. P)

1. Fit the dust bag **53** to the dust port **17** as shown in Figure P.

To Empty the Dust Bag (Fig. P)

1. Remove dust bag **53** from the saw and gently shake or tap the dust bag to empty.
2. Reattach the dust bag back onto the dust port **17**.

You may notice that all the dust will not come free from the bag. This will not affect cutting performance but will reduce the saw's dust collection efficiency. To restore your saw's dust collection efficiency, depress the spring inside the dust bag when you are emptying it and tap it on the side of the trash can or dust receptacle.

Through-Cutting Operations (Fig. A)

If the slide feature is not used, ensure the saw head is pushed back as far as possible and the rail lock knob is tightened. This will prevent the saw from sliding along its rails as the workpiece is engaged.

NOTE: Although this saw will cut wood and many non-ferrous materials, we will limit our detailed discussion to the cutting of wood only. The same guidelines apply to the other materials. DO NOT CUT FERROUS (IRON AND STEEL) MATERIALS OR MASONRY WITH THIS SAW. Do not use any abrasive blades.

NOTE: Refer to **Guard Actuation and Visibility** in the ***Assembly and Adjustments*** section for important information about the lower guard before cutting.

Crosscuts (Fig. A, Q)

A crosscut is made by cutting wood across the grain at any angle. A straight crosscut is made with the mitre arm at the zero degree position. Set and lock the mitre arm at zero, hold the wood firmly on the table and against the fence. With the rail lock knob tightened, turn on the saw by squeezing the trigger switch **1** shown in Figure A.

When the saw comes up to speed (about 1 second) lower the arm smoothly and slowly to cut through the wood. Let the blade come to a full stop before raising arm.

When cutting anything larger than a 51 x 203 mm (51 x 152 at 45° mitre) use an out-down-back motion with the rail lock knob loosened. Pull the saw out, toward you, lower the saw head down toward the workpiece, and slowly push the saw back to complete the cut. Do not allow the saw to contact the top of the workpiece while pulling out. The saw may run toward you, possibly causing personal injury or damage to the workpiece.

Cutting of multiple pieces is not recommended but can be done safely by ensuring that each piece is held firmly against the table and fence.

NOTE: To provide greater crosscut capacity with reduced stroke, the blade on the DCS781 extends deeper into the table. As a result, a greater lifting force on the workpiece may be experienced during the cut.

CAUTION: *Always use a work clamp to maintain control and reduce the risk of workpiece damage and personal injury, if your hands are required to be within 100 mm of the blade during the cut.*

NOTE: The rail lock knob **30** shown in Figure A must be loose to allow the saw to slide along its rails **24**.

Mitre crosscuts are made with the mitre arm at some angle other than zero. This angle is often 45° for making corners, but can be set anywhere from zero to 50° left or 60 ° right. Make the cut as described above.

When performing a mitre cut on workpieces wider than a 51 mm X 152 mm that are shorter in length, always place the longer side against the fence **12** (Figure Q).

To cut through an existing pencil line on a piece of wood, match the angle as close as possible. Cut the wood a little too long and measure from the pencil line to the cut edge to determine which direction to adjust the mitre angle and recut. This will take some practice, but it is a commonly used technique.

Bevel Cuts

A bevel cut is a crosscut made with the saw blade leaning at an angle to the wood. In order to set the bevel, loosen the bevel lock **13**, and move the saw to the left or right as desired. (It is necessary to move the fence to allow clearance.) Once the desired bevel angle has been set, tighten the bevel lock firmly. Refer to the ***Controls*** section for detailed instructions on the bevel system.

Bevel angles can be set from 49° right to 49° left and can be cut with the mitre arm set between 50° left or 60° right. At some extreme angles, the right or left side fence might have to be removed. To remove the left or right fence, unscrew the fence adjustment knob **16** several turns and slide the fence out.

NOTE: Refer to **Fence Adjustment** in the ***Assembly and Adjustments*** section for important information on adjusting the fences for certain bevel cuts.

Quality of Cut

The smoothness of any cut depends on a number of variables. Things like material being cut, blade type, blade sharpness and rate of cut all contribute to the quality of the cut.

When smoothest cuts are desired for molding and other precision work, a sharp (60 tooth carbide) blade and a slower, even cutting rate will produce the desired results.

Ensure that the material does not move or creep while cutting; clamp it securely in place. Always let the blade come to a full stop before raising arm.

If small fibers of wood still split out at the rear of the workpiece, stick a piece of masking tape on the wood where the cut will be made. Saw through the tape and carefully remove tape when finished.

For varied cutting applications, refer to the list of recommended saw blades for your saw and select the one that best fits your needs. Refer to **Saw Blades** under ***Optional Accessories.***

Non-Through-Cutting (Grooving and Rabbeting)

Instructions in the ***Crosscuts, Bevel Cuts*** and ***Cutting Compound Mitres*** sections are for cuts made through the full thickness of the material. The saw can also perform non-through cuts to form grooves or rabbets in the material.

Groove Cut (Fig. A)

Refer to ***Depth Stop*** for detailed instructions for setting depth of cut. A piece of scrap wood should be used to verify the desired depth of cut.

Hold the wood firmly on the table and against the fence **12**. Align the cut area underneath the blade. Position the saw arm fully forward, with blade in down position. Turn on the saw by squeezing the trigger switch **1** shown in Figure A. Smoothly, push saw arm rearward to cut a groove through the workpiece.

Release the trigger switch with the saw arm down. When saw blade has completely stopped, raise the saw arm. Always let the blade come to a full stop before raising the arm.

To widen the groove, repeat steps 1–4 until the desired width is obtained.

Clamping the Workpiece (Fig. A)

WARNING: To reduce the risk of serious personal injury, turn off the tool and disconnect it from the power source before attempting to move it, change accessories or make any adjustments.

WARNING: *A workpiece that is clamped, balanced and secure before a cut may become unbalanced after a cut is completed. An unbalanced load may tip the saw or anything the saw is attached to, such as a table or workbench. When making a cut that may become unbalanced, properly support the workpiece and ensure the saw is firmly bolted to a stable surface. Personal injury may occur.*

WARNING: *The clamp foot must remain clamped above the base of the saw whenever the clamp is used. Always clamp the workpiece to the base of the saw–not to any other part of the work area. Ensure the clamp foot is not clamped on the edge of the base of the saw.*

CAUTION: *Always use a work clamp to maintain control and reduce the risk of workpiece damage and personal injury.*

If you cannot secure the workpiece on the table and against the fence by hand, (irregular shape, etc.) or your hand would be less than 100 mm from the blade, a clamp or other fixture must be used.

For best results use the vertical material clamp **23** provided with your saw. Additional clamps can be purchased at your local retailer or DEWALT service center.

Other aids such as spring clamps, bar clamps or C-clamps may be appropriate for certain sizes and shapes of material. Use care in selecting and placing these clamps. Take time to make a dry run before making the cut. The left fence will slide from side to side to aid in clamping

To Install Clamp (Fig. A)

1. Insert clamp post into the hole behind the fence **12**.
2. Adjust the clamp up turning the knob counterclockwise. And clamp down by turning the knob clockwise. Make sure to firmly clamp the workpiece.

NOTE: Place the clamp on the opposite side of the base when beveling. ALWAYS MAKE DRY RUNS (UNPOWERED) BEFORE FINISH CUTS TO CHECK THE PATH OF THE BLADE. ENSURE THE CLAMP DOES NOT INTERFERE WITH THE ACTION OF THE SAW OR GUARDS.

Support for Long Pieces

WARNING: To reduce the risk of serious personal injury, turn off the tool and disconnect it from the power source before attempting to move it, change accessories or make any adjustments.

ALWAYS SUPPORT LONG PIECES.

Never use another person as a substitute for a table extension; as additional support for a workpiece that is longer or wider than the basic mitre saw table or to help feed, support or pull the workpiece.

Support long workpieces using any convenient means such as sawhorses or similar devices to keep the ends from dropping.

Cutting Picture Frames, Shadow Boxes and Other Four-Sided Projects (Fig. R)

To best understand how to make the items listed here, we suggest that you try a few simple projects using scrap wood until you develop a "feel" for your saw.

Your saw is the perfect tool for mitreing corners like the one shown in Figure R. Sketch 1 in Figure R shows a joint made by using the bevel adjustment to bevel the edges of the two boards at 45° each to produce a 90° corner. For this joint the mitre arm was locked in the zero position and the bevel adjustment was locked at 45°. The wood was positioned with the broad flat side against the table and the narrow edge against the fence. The cut could also be made by mitreing right and left with the broad surface against the fence.

Cutting Trim Molding and Other Frames (Fig. R)

Sketch 2 in Figure R shows a joint made by setting the mitre arm at 45° to mitre the two boards to form a 90° corner. To make this type of joint, set the bevel adjustment to zero and the mitre arm to 45°. Once again, position the wood with the broad flat side on the table and the narrow edge against the fence.

The two sketches in Figure R are for four-sided objects only.

As the number of sides changes, so do the mitre and bevel angles. The chart below gives the proper angles for a variety of shapes.

– EXAMPLES –

NUMBER OF SIDES	Mitre OR BEVEL ANGLE
4	45°
5	36°
6	30°
7	25.7°
8	22.5°
9	20°
10	18°

The chart assumes that all sides are of equal length. For a shape that is not shown in the chart, use the following formula: 180° divided by the number of sides equals the mitre (if the material is cut vertically) or bevel angle (if the material is cut laying flat).

Cutting Compound Mitres (Fig. S)

A compound mitre is a cut made using a mitre angle and a bevel angle at the same time. This is the type of cut used to make frames or boxes with slanting sides like the one shown in Figure T.

WARNING: *If the cutting angle varies from cut to cut, check that the bevel lock knob and the mitre lock handle are securely locked. These must be locked after making any changes in bevel or mitre.*

The chart shown below will assist you in selecting the proper bevel and mitre settings for common compound mitre cuts.

- Select the desired angle A (Fig. S) of your project and locate that angle on the appropriate arc in the chart.
- From that point follow the chart straight down to find the correct bevel angle and straight across to find the correct mitre angle.
- Set your saw to the prescribed angles and make a few trial cuts. Practise fitting the cut pieces together.

Example: To make a 4-sided box with 26 ° exterior angles (Angle A, Fig. S), use the upper right arc. Find 26 ° on the arc scale. Follow the horizontal intersecting line to either side to get mitre angle setting on saw (42 °). Likewise, follow the vertical intersecting line to the top or bottom to get the bevel angle setting on the saw (18 °). Always try cuts on a few scrap pieces of wood to verify the settings on the saw.

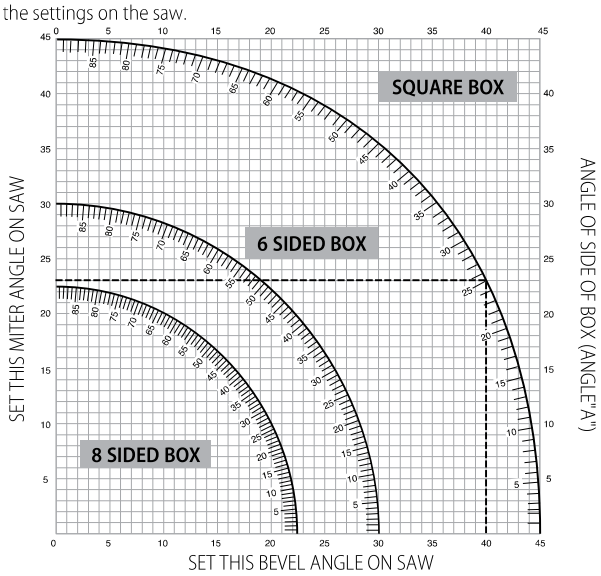

Cutting Base Molding (Fig. T)

ALWAYS MAKE A DRY RUN WITHOUT POWER BEFORE MAKING ANY CUTS.

Straight 90 ° cuts:

Position the wood against the fence and hold it in place as shown in Figure T. Turn on the saw, allow the blade to reach full speed and lower the arm smoothly through the cut.

Cutting Base Molding up to 165 mm Vertically Against the Fence (Fig. L, T)

NOTE: Use the slide lock lever, shown in Figure L1 when cutting base molding measuring from 76 mm to 165 mm high vertically against the fence.

Position material as shown in Figure T.

All cuts should be made with the back of the molding against the fence and with the bottom of the molding against the table.

	Inside corner	Outside corner
Left side	1. Mitre left 45° 2. Save left side of cut	1. Mitre right 45° 2. Save left side of cut
Right side	1. Mitre right 45° 2. Save right side of cut	1. Mitre left 45° 2. Save right side of cut

Material up to 165 mm can be cut as described above.

Cutting Crown Molding

Your mitre saw is better suited to the task of cutting crown molding than any tool made. In order to fit properly, crown molding must be compound mitreed with extreme accuracy.

The two flat surfaces on a given piece of crown molding are at angles that, when added together, equal exactly 90 °. Most, but not all, crown molding has a top rear angle (the section that fits flat against the ceiling) of 52 ° and a bottom rear angle (the part that fits flat against the wall) of 38 °.

Your mitre saw has special pre-set mitre latch points at 31.6 ° left and right for cutting crown molding at the proper angle and bevel stop pawls at 33.9 ° left and right. There is also a mark on the bevel scale at 33.9 °.

The chart below gives the proper settings for cutting crown molding. (The numbers for the mitre and bevel settings are very precise and are not easy to accurately set on your saw.) Since most rooms do not have angles of precisely 90º, you will have to fine tune your settings anyway.

PRETESTING WITH SCRAP MATERIAL IS EXTREMELY IMPORTANT!

Instructions for Cutting Crown Molding Laying Flat and Using the Compound Features (Fig. A, U)

1. Molding laying with broad back surface down flat on saw table **18**.
2. Top of molding against fence **12**.
3. The settings below are for all standard (U.S.) crown molding with 52 ° and 38 ° angles.

	Inside corner	Outside corner
Left side	1. Bevel left 33.9° 2. Mitre table set at right 31.62° 3. Save left end of cut	1. Bevel right 33.9° 2. Mitre table set at left 31.62° 3. Save left end of cut
Right side	1. Bevel right 33.9° 2. Mitre table set at left 31.62° 3. Save right end of cut	1. Bevel left 33.9° 2. Mitre table set at right 31.62° 3. Save right end of cut

When setting bevel and mitre angles for all compound mitres, remember that:

The angles presented for crown moldings are very precise and difficult to set exactly. Since they can easily shift slightly and very few rooms have exactly square corners, all settings should be tested on scrap molding.

PRETESTING WITH SCRAP MATERIAL IS EXTREMELY IMPORTANT!

Alternative Method for Cutting Crown Molding (Fig. V)

Place the molding on the table at an angle between the sliding fence **12** and the saw table **18**, as shown in Figure V. Use of the crown molding fence accessory (DW7084) is highly recommended because of its degree of accuracy and convenience. The crown molding fence accessory is available for purchase from your local dealer.

The advantage to cutting crown molding using this method is that no bevel cut is required. Minute changes in the mitre angle can be made without affecting the bevel angle. This way, when corners other than 90 ° are encountered, the saw can be quickly and easily adjusted for them. Use the crown molding fence accessory to maintain the angle at which the molding will be on the wall.

Instructions for Cutting Crown Molding Angled Between the Fence and Base of the Saw for All Cuts

1. Angle the molding so the bottom of the molding (part which goes against the wall when installed) is against the fence and the top of the molding is resting on the base of the saw, as shown in Figure V..
2. The angled "flats" on the back of the molding must rest squarely on the fence and base of the saw.

	Inside corner	Outside corner
Left side	1. Mitre right 45° 2. Save right side of cut	1. Mitre left 45° 2. Save right side of cut
Right side	1. Mitre left 45° 2. Save left side of cut	1. Mitre right 45° 2. Save left side of cut

Special Cuts

NEVER MAKE ANY CUT UNLESS THE MATERIAL IS SECURED ON THE TABLE AND AGAINST THE FENCE.

Aluminum Cutting (Fig. A, W)

ALWAYS USE THE APPROPRIATE SAW BLADE MADE ESPECIALLY FOR CUTTING ALUMINUM. These are available at your local DEWALT retailer or DEWALT service center. Certain workpieces, due to their size, shape or surface finish, may require the use of a clamp or fixture to prevent movement during the cut. Position the material so that you will be cutting the thinnest cross section, as shown in Figure W. Figure W also illustrates the wrong way to cut these extrusions.

Use a stick wax cutting lubricant when cutting aluminum. Apply the stick wax directly to the saw blade **39** before cutting. Never apply stick wax to a moving blade.

The wax, available at most hardware stores, provides proper lubrication and keeps chips from adhering to the blade.

Be sure to properly secure workpiece.

Refer to **Saw Blades** under ***Optional Accessories*** for correct saw blade.

Bowed Material (Fig. X, Y)

When cutting bowed material always position it as shown in Figure X and never like that shown in Figure Y. Positioning the material incorrectly will cause it to pinch the blade near the completion of the cut.

Cutting Plastic Pipe or Other Round Material

Plastic pipe can be easily cut with your saw. It should be cut just like wood and **CLAMPED OR HELD FIRMLY TO THE FENCE TO KEEP IT FROM ROLLING**. This is extremely important when making angle cuts.

Cutting Large Material (Fig. Z)

Occasionally you will encounter a piece of wood a little too large to fit beneath the lower guard. If this occurs, simply place your right thumb on the upper side of the guard and roll the guard up just enough to clear the workpiece, as shown in Figure Z. Avoid doing this as much as possible, but if need be, the saw will operate properly and make the bigger cut. NEVER TIE, TAPE, OR OTHERWISE HOLD THE GUARD OPEN WHEN OPERATING THIS SAW.

MAINTENANCE

Your DEWALT power tool has been designed to operate over a long period of time with a minimum of maintenance. Continuous satisfactory operation depends upon proper tool care and regular cleaning.

WARNING: To reduce the risk of serious personal injury, turn machine off and disconnect battery pack before making any adjustments or removing/installing attachments or accessories. *An accidental start-up can cause injury.*

WARNING: *If the saw blade is worn replace it with a new sharp blade.*

DO NOT use lubricants or cleaners (particularly spray or aerosol) in the vicinity of the plastic guard. The polycarbonate material used in the guard is subject to attack by certain chemicals.

1. All bearings are sealed. They are lubricated for life and need no further maintenance.
2. Periodically clean all dust and wood chips from around AND UNDER the base and the rotary table. Even though slots are provided to allow debris to pass through, some dust will accumulate.

Lubrication

Your power tool requires no additional lubrication.

Cleaning

Before use, carefully check the upper blade guard, movable lower blade guard as well as the dust extraction tube to determine that it will operate properly. Ensure that chips, dust or workpiece particle cannot lead to blockage of one of the functions.

In case of workpiece fragments jammed between saw blade and guards disconnect the machine from the power supply and follow the instructions given in section ***Changing or Installing a New Saw Blade***. Remove the jammed parts and reassembling the saw blade.

WARNING: *Blow dirt and dust out of the main housing with dry air as often as dirt is seen collecting in and around the air vents. Wear approved eye protection and approved dust mask when performing this procedure.*

WARNING: *Never use solvents or other harsh chemicals for cleaning the non-metallic parts of the tool. These chemicals may weaken the materials used in these parts. Use a cloth dampened only with water and mild soap. Never let any liquid get inside the tool; never immerse any part of the tool into a liquid.*

WARNING: To reduce the risk of injury, *regularly clean the table top.*

WARNING: To reduce the risk of injury, *regularly clean the dust collection system.*

Worklight Cleaning

For the best worklight performance, perform the following maintenance regularly.

1. Carefully clean sawdust and debris from worklight lens with a cotton swab.
2. DO NOT use solvents of any kind, they may damage the lens.
3. Dust build-up can block the worklight and prevent it from accurately indicating the line of cut.
4. Follow mitre saw's instruction manual to remove and install blade.
5. With blade removed from saw, clean pitch and build-up from blade. Pitch and debris can interfere with the worklight and prevent it from accurately indicating the line of cut.

Optional Accessories

WARNING: *Since accessories, other than those offered by DEWALT, have not been tested with this product, use of such accessories with this tool could be hazardous. To reduce the risk of injury, only DEWALT, recommended accessories should be used with this product.*

SAW BLADES: ALWAYS USE 305 mm SAW BLADES WITH 25.4 mm ARBOUR HOLES. SPEED RATING MUST BE AT LEAST 4800 RPM. Never use a smaller diameter blade. It will not be guarded properly. Use crosscut blades only! Do not use blades designed for ripping, combination blades or blades with hook angles in excess of 7 °.

BLADE DESCRIPTIONS

APPLICATION	DIAMETER	TEETH
Construction Saw Blades (thin kerf with anti-stick rim)		
General Purpose	305 mm	40
Fine Crosscuts	305 mm	60
Woodworking Saw Blades (provide smooth, clean cuts)		
Fine crosscuts	305 mm	80
Non-ferrous metals	305 mm	96

Consult your dealer for further information on the appropriate accessories.

Protecting the Environment

Separate collection. Products and batteries marked with this symbol must not be disposed of with normal household waste.

Products and batteries contain materials that can be recovered or recycled reducing the demand for raw materials. Please recycle electrical products and batteries according to local provisions. Further information is available at **www.2helpU.com**.

Rechargeable Battery Pack

This long life battery pack must be recharged when it fails to produce sufficient power on jobs which were easily done before. At the end of its technical life, discard it with due care for our environment:

- Run the battery pack down completely, then remove it from the tool.
- Li-Ion cells are recyclable. Take them to your dealer or a local recycling station. The collected battery packs will be recycled or disposed of properly.

Troubleshooting Guide

BE SURE TO FOLLOW SAFETY RULES AND INSTRUCTIONS

TROUBLE!	WHAT'S WRONG?	WHAT TO DO
Saw will not start	Battery not installed	Install battery. Refer to ***Installing and Removing Battery Pack***.
	Battery not charged	Charge battery. Refer to ***Charging Procedure***.
	Saw overheated	Wait several minutes for saw to cool.
	Batteries overheated	Wait several minutes for batteries to cool.
Saw makes unsatisfactory cuts	Dull blade	Replace blade. Refer to ***Changing or Installing a New Saw Blade***.
	Blade mounted backwards	Turn blade around. Refer to ***Changing or Installing a New Saw Blade***.
	Gum or pitch on blade	Remove blade and clean with coarse steel wool and turpentine or household oven cleaner.
	Incorrect blade for work being done	Change the blade type. Refer to **Saw Blades** under ***Optional Accessories***.
CUTLINE worklight is flashing	Battery not charged	Charge battery. Refer to ***Charging Procedure***.
Machine vibrates excessively	Saw not mounted securely to stand or work bench	Tighten all mounting hardware. Refer to ***Bench Mounting***.
	Stand or bench on uneven floor	Reposition on flat level surface. Refer to ***Familiarization***.
	Damaged saw blade	Replace blade. Refer to ***Changing or Installing a New Saw Blade***.
Does not make accurate mitre cuts	Mitre scale not adjusted correctly	Check and adjust. Refer to **Mitre Scale Adjustment** under ***Assembly and Adjustments***.
	Blade is not square to fence	Check and adjust. Refer to **Mitre Scale Adjustment** under ***Assembly and Adjustments***.
	Blade is not perpendicular to table	Check and adjust fence. Refer to **Bevel Square to Table Adjustment** under ***Assembly and Adjustments***.
	Workpiece moving	Clamp workpiece securely to fence or glue 120 grit sandpaper to fence with rubber cement.
	Kerf plate worn or damaged	Take to authorized service center.
	Mitre pointer not adjusted correctly	Check and adjust. Refer to ***Mitre Pointer Adjustment*** under ***Assembly and Adjustments***.
Material pinches blade	Cutting bowed material	Refer to **Bowed Material** under ***Special Cuts***.

SIERRA INGLETADORA
DCS781

Ha elegido una herramienta DEWALT. Años de experiencia, innovación y un exhaustivo desarrollo de productos han convertido a DEWALT en una de las empresas más fiables para los usuarios de herramientas eléctricas profesionales.

Datos técnicos

		DCS781
Voltaje	V_{cc}	54
Tipo		20
Tipo de batería		Iones de litio
Diámetro de la hoja	mm	305
Orificio de la hoja	mm	30
Espesor del cuerpo de la hoja	mm	1,6
Espesor máx. de entalladura	mm	2,2
Velocidad máx. hoja	min[1]	3800
Capacidad máx. corte transversal 90°	mm	310
Capacidad máx. inglete 45°	mm	219
Profundidad máx. corte 90°	mm	112
Profundidad máx. corte transversal bisel 45°	mm	50
Inglete (máx. posiciones)	izquierda	50°
	derecha	60°
Bisel (máx. posiciones)	izquierda	49°
	derecha	49°
Inglete 0°		
Anchura resultante a altura máx. placa base 165 mm	mm	19
Anchura resultante a altura máx. 112 mm	mm	278
Altura resultante a anchura máx. 310 mm	mm	90
Inglete izquierda 45°		
Anchura resultante a altura máx. 112 mm	mm	197
Altura resultante a anchura máx. 219 mm	mm	90
Inglete derecha 45°		
Anchura resultante a altura máx. 112 mm	mm	197
Altura resultante a anchura máx. 219 mm	mm	90
Bisel izquierda 45°		
Anchura resultante a altura máx. 60 mm	mm	278
Altura resultante a anchura máx. 310 mm	mm	54
Bisel derecha 45°		
Anchura resultante a altura máx. 50 mm	mm	296
Altura resultante a anchura máx. 310 mm	mm	40
Tiempo automático de parada de la hoja	s	< 5
Transmisor Wireless Tool Control		
Potencia máx.	MHz	433
banda de frecuencia (EIRP)	mW	0,03
Peso (sin batería)	kg	23,2

Valores de ruido y/o de vibración (suma de vectores triaxiales) según la norma EN62841-3-9:		
L_{PA} (nivel de presión sonora de emisión)	dB(A)	94,4
L_{WA} (nivel de potencia sonora)	dB(A)	106,4
K (incertidumbre del nivel de sonido dado)	dB(A)	2,5

El nivel de emisión de vibraciones y/o ruido que figura en esta hoja de información se ha medido de conformidad con una prueba normalizada proporcionada en la EN62841 y puede utilizarse para comparar una herramienta con otra. Puede usarse para una evaluación preliminar de la exposición.

ADVERTENCIA: *El nivel de emisión de vibraciones y/o ruido declarado se refiere a las principales aplicaciones de la herramienta. Sin embargo, si se utiliza la herramienta para otras aplicaciones, con accesorios diferentes o mantenidos de forma incorrecta, la emisión de ruido o vibraciones puede variar. Esto puede aumentar considerablemente el nivel de exposición durante el período total de trabajo.*

Para valorar el nivel de exposición al ruido o a las vibraciones, también deberían tenerse en cuenta las veces que la herramienta está apagada o en funcionamiento pero sin realizar ningún trabajo. Esto puede reducir considerablemente el nivel de exposición durante el periodo total de trabajo.

Identifique medidas de seguridad adicionales para proteger al operador de los efectos del ruido y las vibraciones, como, por ejemplo, realizar el mantenimiento de la herramienta y de los accesorios, mantener las manos calientes (relevante para las vibraciones) u organizar patrones de trabajo.

Declaración de conformidad CE

Directiva de máquinas y directiva de equipos radioeléctricos

CE

Sierra ingletadora
DCS781

DEWALT declara que los productos descritos en ***Datos técnicos*** cumplen las siguientes normas: 2006/42/CE, EN62841-1:2015 +AC:2015; EN62841-3-9:2020 + A11:2020.

Estos productos también cumplen las Directivas 2014/53/UE; 2014/30/UE y 2011/65/UE.
Si desea más información, póngase en contacto con DEWALT en la dirección indicada a continuación o bien consulte la parte posterior del manual.

El que suscribe es responsable de la compilación del archivo técnico y realiza esta declaración en nombre de DEWALT.

Markus Rompel
Vicepresidente de ingeniería, PTE-Europe
DEWALT, Richard-Klinger-Straße 11
65510, Idstein (Alemania)
29.04.2022

ADVERTENCIA: *Para reducir el riesgo de lesiones, lea el manual de instrucciones.*

Definiciones: Pautas de seguridad

Las definiciones que figuran a continuación describen el nivel de gravedad correspondiente a cada término de señal. Lea el manual y preste atención a estos símbolos.

PELIGRO: *Indica una situación de peligro inminente que, de no evitarse,* ***causará la muerte o lesiones graves****.*

ADVERTENCIA: *Indica una situación potencialmente peligrosa que, de no evitarse,* ***podría*** *ocasionar* ***la muerte o una lesión grave****.*

ATENCIÓN: *Indica una situación potencialmente peligrosa que, de no evitarse,* ***puede*** *ocasionar* ***una lesión de poca o moderada gravedad****.*

AVISO: *Indica una práctica* ***no relacionada con las lesiones personales*** *que, de no evitarse,* ***puede*** *ocasionar* ***daños materiales****.*

Indica riesgo de descarga eléctrica.

Indica riesgo de incendio.

ADVERTENCIAS DE SEGURIDAD GENERALES PARA HERRAMIENTAS ELÉCTRICAS

ADVERTENCIA: Lea todas las advertencias de seguridad, instrucciones, ilustraciones y especificaciones suministradas con esta herramienta eléctrica. *El incumplimiento de las instrucciones que se indican a continuación puede causar descargas eléctricas, incendios y/o lesiones graves.*

GUARDE TODAS LAS ADVERTENCIAS E INSTRUCCIONES PARA PODER CONSULTARLAS EN EL FUTURO.

El término "herramienta eléctrica" que aparece en las advertencias se refiere a la herramienta eléctrica que funciona a través de la red eléctrica (con cable) o a la herramienta eléctrica que funciona con batería (sin cable).

1) Seguridad en la zona de trabajo

a) ***Mantenga su área de trabajo limpia y bien iluminada.*** *Las áreas desordenadas u oscuras pueden provocar accidentes.*

b) ***No utilice herramientas eléctricas en atmósferas explosivas, como ambientes donde haya polvo, gases o líquidos inflamables.*** *Las herramientas eléctricas originan chispas que pueden inflamar el polvo o los gases.*

c) ***Mantenga alejados a los niños y a las personas que estén cerca mientras utiliza una herramienta eléctrica.*** *Las distracciones pueden ocasionar una pérdida de control.*

2) Seguridad eléctrica

a) ***Los enchufes de las herramientas eléctricas deben corresponderse con la toma de corriente. No modifique nunca el enchufe de ninguna forma. No utilice ningún enchufe adaptador con herramientas eléctricas conectadas a tierra (a masa).*** *Los enchufes no modificados y las tomas de corriente correspondientes reducen el riesgo de descarga eléctrica.*

b) ***Evite el contacto corporal con superficies conectadas a tierra tales como tuberías, radiadores, cocinas y neveras.*** *Existe un mayor riesgo de descarga eléctrica si su propio cuerpo está conectado a tierra.*

c) ***No exponga las herramientas eléctricas a la lluvia ni a condiciones húmedas.*** *Si entra agua en una herramienta eléctrica, aumenta el riesgo de descarga eléctrica.*

d) ***No someta el cable de alimentación a presión innecesaria. No use nunca el cable para transportar, tirar de la herramienta eléctrica o desenchufarla. Mantenga el cable alejado del calor, aceite, bordes afilados y piezas en movimiento.*** *Los cables dañados o enredados aumentan el riesgo de descarga eléctrica.*

Pilas				Tiempo Cargadores/Carga (Minutos)**								
Cat #	V_{DC}	Ah	Peso (kg)	DCB104	DCB107	DCB112	DCB113	DCB115	DCB116	DCB117	DCB118	DCB132
DCB546	18/54	6,0/2,0	1,08	60	270	170	140	90	80	40	60	90
DCB547	18/54	9,0/3,0	1,46	75*	420	270	220	135*	110*	60	75*	135*
DCB548	18/54	12,0/4,0	1,46	120	540	350	300	180	150	80	120	180
DCB549	18/54	15,0/5,0	2,12	125	730	450	380	230	170	90	125	230

Código de fecha 201811475B o posterior

e) ***Cuando esté utilizando una herramienta eléctrica al aire libre, use un cable prolongador adecuado para uso en exteriores.*** *La utilización de un cable adecuado para el uso en exteriores reduce el riesgo de descarga eléctrica.*

f) ***Si la utilización de una herramienta eléctrica en un lugar húmedo es inevitable, utilice suministro protegido por un interruptor del circuito de fallos de conexión a tierra (GFCI).*** *El uso de un GFCI reduce el riesgo de descarga eléctrica.*

3) Seguridad personal

a) ***Manténgase alerta, esté atento a lo que hace y use el sentido común cuando utilice una herramienta eléctrica. No maneje una herramienta eléctrica cuando esté cansado o bajo los efectos de drogas, medicamentos o alcohol.*** *Un momento de desatención cuando se manejan herramientas eléctricas puede ocasionar lesiones personales graves.*

b) ***Utilice equipo de protección personal. Utilice siempre protección ocular.*** *El uso del equipo de protección individual, como mascarilla antipolvo, calzado antideslizante, casco o protección auditiva para condiciones apropiadas, reduce las lesiones personales.*

c) ***Evite la puesta en funcionamiento involuntaria. Asegúrese de que el interruptor esté en posición de apagado antes de conectar la fuente de alimentación y/o la batería, levantar o transportar la herramienta.*** *Transportar herramientas eléctricas con el dedo puesto en el interruptor o herramientas eléctricas de alimentación con el interruptor encendido puede causar accidentes.*

d) ***Saque cualquier llave de ajuste o llave inglesa antes de encender la herramienta eléctrica.*** *Si se deja puesta una llave inglesa u otra llave en una pieza en movimiento de la herramienta eléctrica pueden ocasionarse lesiones personales.*

e) ***No se estire demasiado. Mantenga un equilibrio adecuado y la estabilidad constantemente.*** *Esto permite un mejor control de la herramienta eléctrica en situaciones inesperadas.*

f) ***Use la vestimenta adecuada. No utilice ropas holgadas ni joyas. Mantenga el cabello, la ropa y los guantes alejados de las piezas en movimiento.*** *La ropa suelta, las joyas y el pelo largo pueden quedar atrapados entre las piezas móviles.*

g) ***Si se suministran dispositivos para la conexión del equipo de extracción y recogida de polvo, asegúrese de que estén conectados y de que se usen adecuadamente.*** *El uso de equipo de recogida de polvo puede reducir los riesgos relacionados con el polvo.*

h) ***No deje que la familiaridad adquirida con el uso frecuente de las herramientas le lleve a fiarse demasiado y a descuidar las principales normas de seguridad de la herramienta.*** *En cuestión de segundos, un descuido puede causar lesiones graves.*

4) Uso y cuidado de la herramienta eléctrica

a) ***No fuerce la herramienta eléctrica. Use la herramienta eléctrica correcta para su trabajo.*** *La herramienta eléctrica correcta funcionará mejor y con mayor seguridad si se utiliza a de acuerdo con sus características técnicas.*

b) ***No utilice la herramienta eléctrica si no puede encenderse y apagarse con el interruptor.*** *Toda herramienta eléctrica que no pueda controlarse con el interruptor es peligrosa y debe ser reparada.*

c) ***Desconecte el enchufe de la fuente de alimentación y/o extraiga la batería de la herramienta eléctrica, si es desmontable, antes de realizar ajustes, cambiar accesorios o guardar las herramientas eléctricas.*** *Dichas medidas de seguridad preventivas reducen el riesgo de poner en marcha accidentalmente la herramienta eléctrica.*

d) ***Guarde las herramientas eléctricas que no esté utilizando fuera del alcance de los niños y no permita que las utilicen las personas que no estén familiarizadas con ellas o con estas instrucciones.*** *Las herramientas eléctricas son peligrosas en manos de personas no capacitadas.*

e) ***Efectúe el mantenimiento de las herramientas eléctricas y de los accesorios. Compruebe si hay desalineación o bloqueo de las piezas móviles, rotura de piezas y otras condiciones que puedan afectar al funcionamiento de la herramienta eléctrica. Si la herramienta eléctrica está dañada, llévela a reparar antes de utilizarla.*** *Muchos accidentes se producen por el mantenimiento inadecuado de las herramientas eléctricas.*

f) ***Mantenga las herramientas de corte afiladas y limpias.*** *Hay menos probabilidad de que las herramientas de corte con bordes afilados se bloqueen y son más fáciles de controlar.*

g) ***Utilice la herramienta eléctrica, los accesorios, los útiles de la herramienta, etc. de acuerdo con estas instrucciones, y tenga en cuenta las condiciones de trabajo y la tarea que se va a realizar.*** *El uso de la herramienta eléctrica para operaciones que no sean las previstas puede ocasionar una situación peligrosa.*

h) ***Mantenga todas las empuñaduras y superficies de agarre secas, limpias y libres de aceite y grasa.*** *Las empuñaduras y superficies de agarre resbaladizas impiden el agarre y el control seguro de la herramienta en situaciones imprevistas.*

5) Uso y cuidado de la herramienta con batería

a) ***Haga las recargas exclusivamente con el cargador indicado por el fabricante.*** *Un cargador adecuado para un tipo de batería puede causar riesgo de incendio si se utiliza con otra batería.*

b) ***Utilice herramientas eléctricas solamente cuando se especifique en la batería.*** *El uso de otra batería puede ocasionar riesgo de lesiones o incendios.*

c) ***Cuando no utilice la batería, manténgala alejada de otros objetos metálicos como clips de papel, monedas, llaves, clavos, tornillos u otros objetos metálicos pequeños que puedan establecer una conexión entre terminales.*** *Puentear los terminales de la batería puede causar quemaduras o un incendio.*

d) ***En condiciones abusivas, podrá salir líquido de la batería, evite el contacto. Si se produce un contacto accidental, lávese con agua. Si el líquido entra en contacto con los ojos, busque atención médica de inmediato.*** *El líquido expulsado por la batería puede causar irritaciones o quemaduras.*

e) ***No utilice baterías o herramientas dañadas o modificadas.*** *Las baterías dañadas o modificadas pueden tener un funcionamiento imprevisto y provocar incendios, explosiones o riesgos de lesiones.*

f) ***No exponga la batería o la herramienta al fuego o a temperaturas excesivas.*** *La exposición al fuego o a una temperatura superior a 130 °C puede causar explosión.*

g) ***Siga todas las instrucciones de carga y no cargue la batería o la herramienta fuera del rango de temperatura indicado en las instrucciones.*** *La carga incorrecta o a temperaturas fuera del intervalo especificado puede dañar la batería y aumentar el riesgo de incendio.*

6) Servicio

a) ***Lleve su herramienta eléctrica para que sea reparada por una persona cualificada para realizar las reparaciones y que use solo piezas de repuesto idénticas.*** *Esto le asegurará el mantenimiento de la seguridad de la herramienta eléctrica.*

b) ***No repare nunca las baterías dañadas.*** *La reparación de las baterías debe ser realizada únicamente por el fabricante o los proveedores de servicios autorizados.*

Instrucciones de seguridad para sierras de inglete

a) ***Las sierras de inglete han sido diseñadas para cortar madera o sucedáneos de la madera y no pueden utilizarse con discos de corte abrasivos para cortar materiales ferrosos tales como barras, varillas, espárragos, etc.*** *El polvo abrasivo hace que las piezas móviles, como el protector inferior, se atasquen. Las chispas del corte abrasivo queman el protector inferior, el inserto de corte y otras piezas plásticas.*

b) ***Utilice mordazas para fijar la pieza cuando sea posible. Si sostiene la pieza de trabajo a mano, siempre tiene que mantener la mano a por lo menos 100 mm a cada lado de la hoja de la sierra. No use esta sierra para cortar piezas demasiado pequeñas para ser firmemente sujetadas o sostenidas con la mano.*** *Si coloca la mano demasiado cerca de la hoja de la sierra, existe mayor riesgo de lesiones por contacto con la hoja.*

c) ***La pieza de trabajo debe estar inmóvil y sujeta o retenida contra el tope-guía y la mesa. No alimente la pieza de trabajo hacia la hoja ni corte "a mano alzada" en ningún caso.*** *Las piezas de trabajo sin sujeción o en movimiento pueden ser lanzadas a gran velocidad, causando lesiones.*

d) ***Empujar la sierra a través de la pieza de trabajo. No empuje la sierra a través de la pieza de trabajo. Para hacer un corte, levante el cabezal de la sierra y tire de él sobre la pieza de trabajo sin cortar, arranque el motor, presione el cabezal de la sierra hacia abajo y empuje la sierra por la pieza de trabajo.*** *Es probable que el corte a tracción haga que la hoja de la sierra se suba a la parte superior de la pieza de trabajo y lance violentamente el conjunto de la hoja hacia el operador.*

e) ***Nunca cruce la mano por encima de la línea de corte prevista, ni delante ni detrás de la hoja de la sierra.*** *Sostener la pieza de trabajo "con las manos cruzadas", es decir, sosteniendo la pieza de trabajo a la derecha de la hoja de la sierra con la mano izquierda, o viceversa, es muy peligroso.*

f) ***No meta las manos detrás del tope-guía, a una distancia inferior a 100 mm a cada lado de la hoja de la sierra para eliminar fragmentos de madera ni por ningún otro motivo, mientras esté girando la hoja.*** *La proximidad de la mano a la hoja de la sierra cuando esta está girando puede no ser obvia y pueden producirse lesiones graves.*

g) ***Inspeccione la pieza de trabajo antes de cortar. Si la pieza está curvada o torcida, sujétela con la cara exterior curvada mirando hacia el tope-guía. Asegúrese siempre de que no quede ningún hueco entre la pieza de trabajo, el tope-guía y la mesa a lo largo de la línea del corte. Las piezas de trabajo dobladas o deformadas pueden girarse o desplazarse y pueden atascar la hoja de la sierra durante el corte.*** *La pieza de trabajo no debe tener clavos ni otros objetos extraños.*

h) ***No utilice la sierra hasta que la mesa esté libre de herramientas, fragmentos de madera, etc., excepto la pieza de trabajo.*** *Si los residuos pequeños, las piezas sueltas de madera u otros objetos entran en contacto con la hoja giratoria pueden ser lanzados a gran velocidad.*

i) ***Corte una sola pieza de trabajo por vez.*** *Cuando se apilan varias piezas, estas no pueden sujetarse o asegurarse adecuadamente y pueden trabar la hoja o desplazarse durante el corte.*