AGILLO 18/200

D **Originalbetriebsanleitung**
Akku-Sense

GB **Original operating instructions**
Cordless scythe

F **Instructions d'origine**
Débroussailleuse sans fil

I **Istruzioni per l'uso originali**
Decespugliatore a batteria

DK/N **Original betjeningsvejledning**
Akku-le

S **Original-bruksanvisning**
Batteridriven röjsåg

CZ **Originální návod k obsluze**
Akumulátorová kosa

SK **Originálny návod na obsluhu**
Akumulátorová kosa

NL **Originele handleiding**
Accu-zeis

E **Manual de instrucciones original**
Desbrozadora inalámbrica

FIN **Alkuperäiskäyttöohje**
Akkuviikate

SLO **Originalna navodila za uporabo**
Akumulatorska kosa

H **Eredeti használati utasítás**
Akkus-fűkasza

RO **Instrucțiuni de utilizare originale**
Cositoare cu acumulator

GR **Πρωτότυπες Οδηγίες χρήσης**
Δρεπάνι μπαταρίας

P **Manual de instruções original**
Foice elétrica sem fio

HR/BIH **Originalne upute za uporabu**
Akumulatorski šišač trave

RS **Originalna uputstva za upotrebu**
Akumulatorski trimer za travu

PL **Instrukcją oryginalną**
Kosa akumulatorowa

TR **Orijinal Kullanma Talimatı**
Akülü tırpan

EE **Originaalkasutusjuhend**
Akutrimmer

13

Art.-Nr.: 34.113.10 (Solo) **I.-Nr.: 21010**

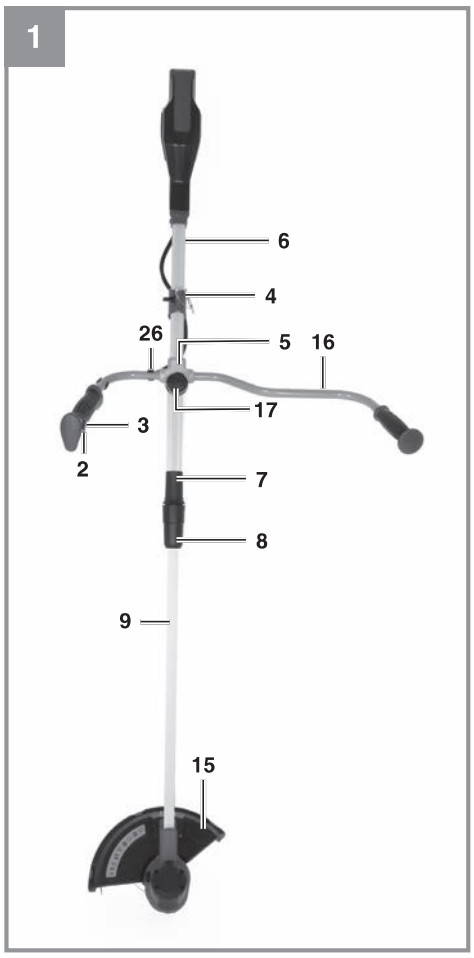



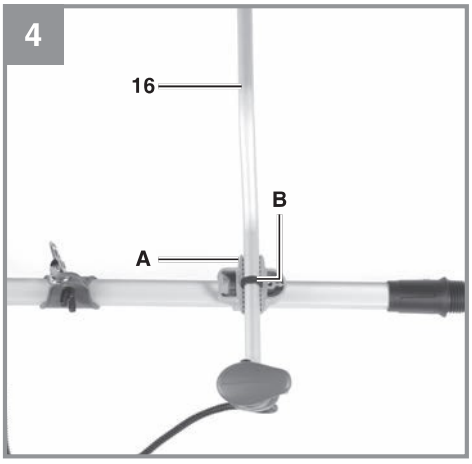

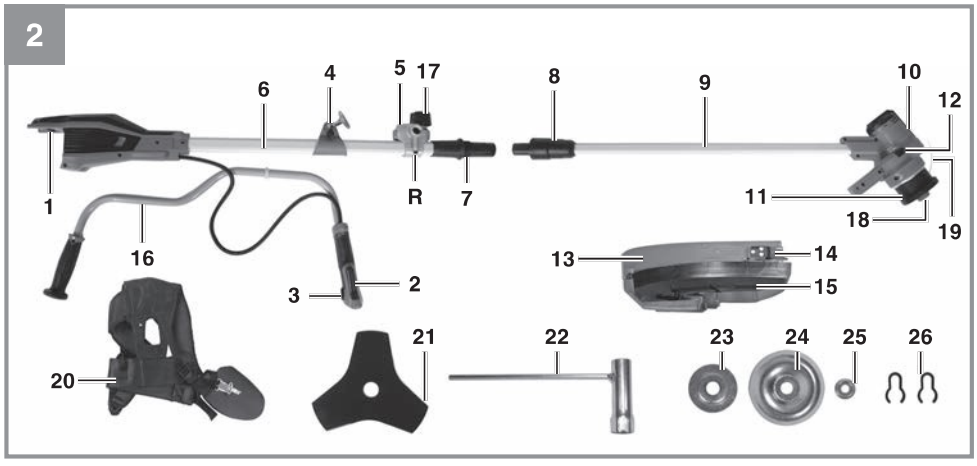

Anl_Agillo_18_200_SPK13.indb 2 19.11.2021 08:33:09

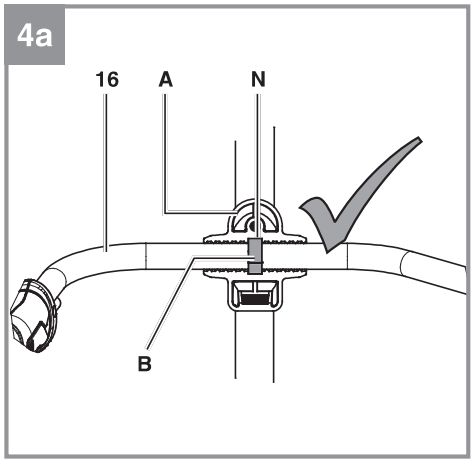

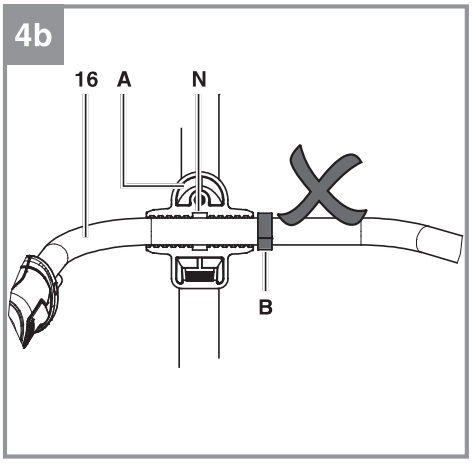

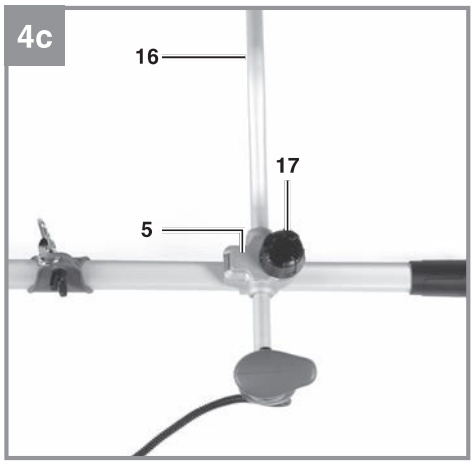

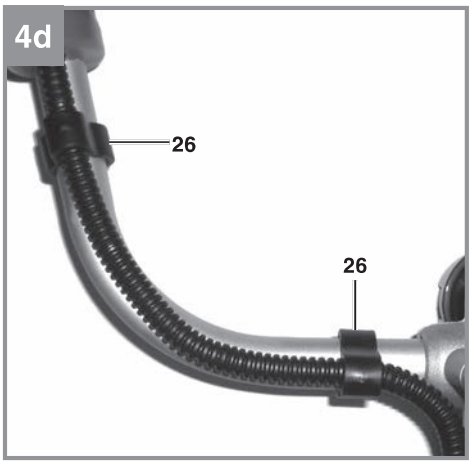

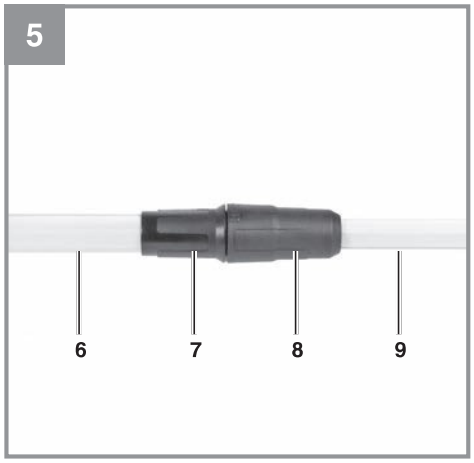



Anl_Agillo_18_200_SPK13.indb 3 19.11.2021 08:33:12



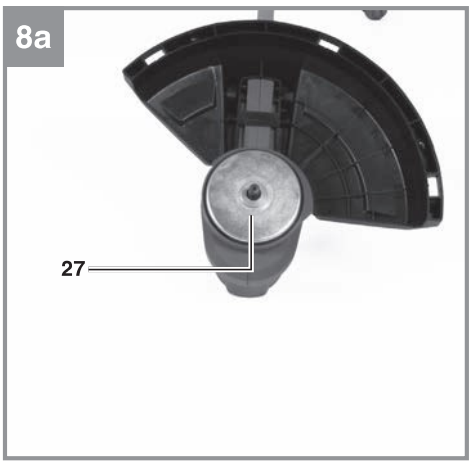

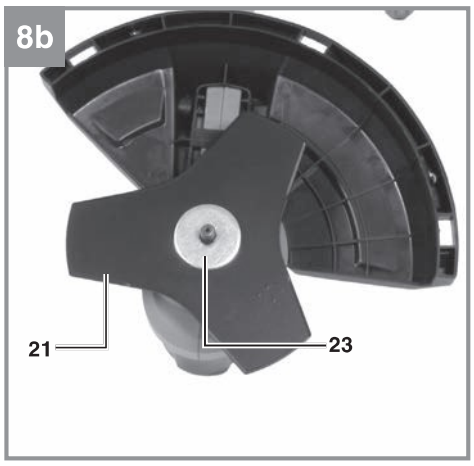

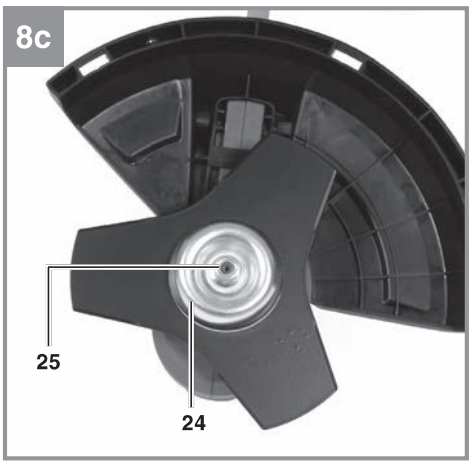

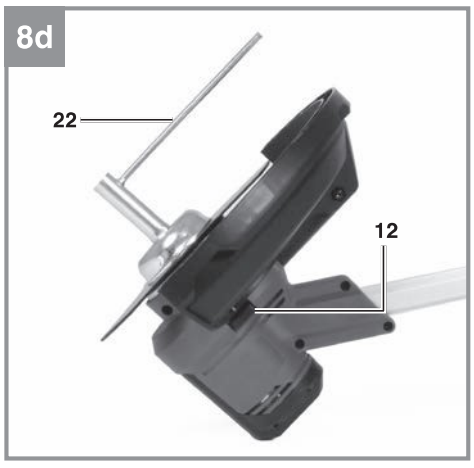

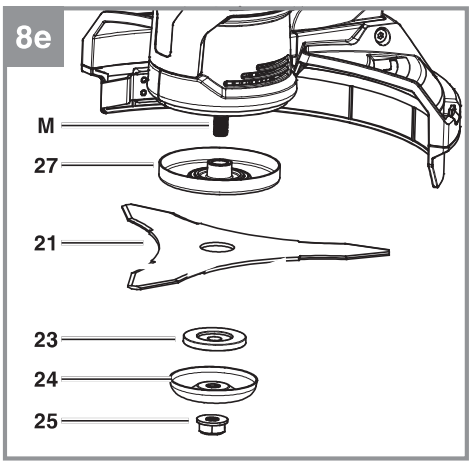

Anl_Agillo_18_200_SPK13.indb 4 19.11.2021 08:33:14

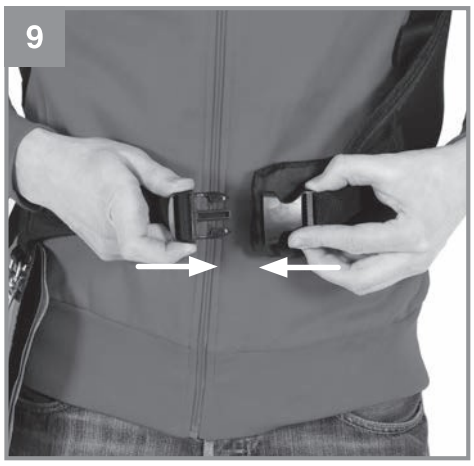









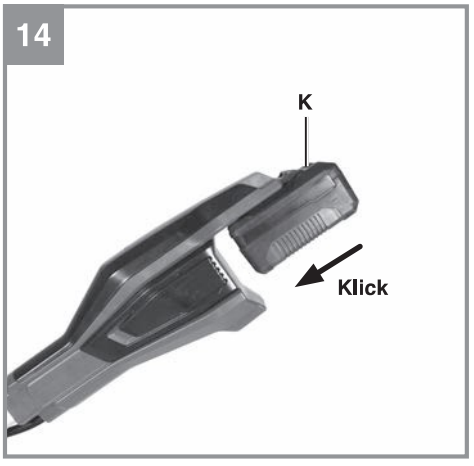

AnI_Agillo_18_200_SPK13.indb 5 19.11.2021 08:33:18

15a



15b

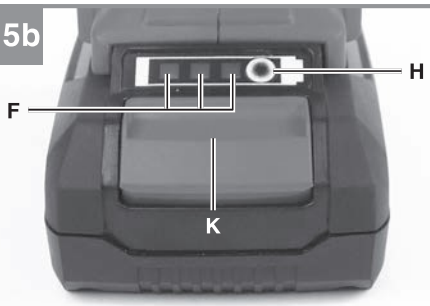

16

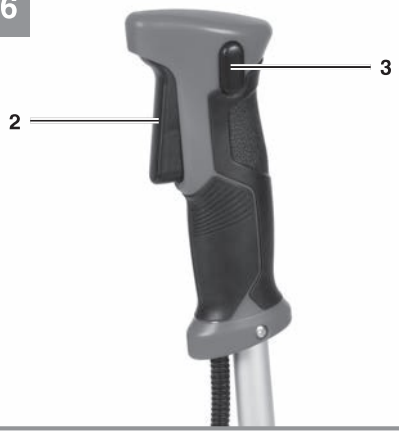

17

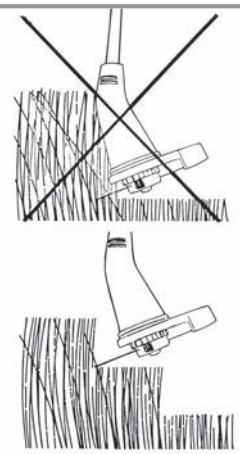

18

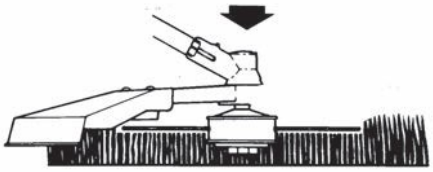

19

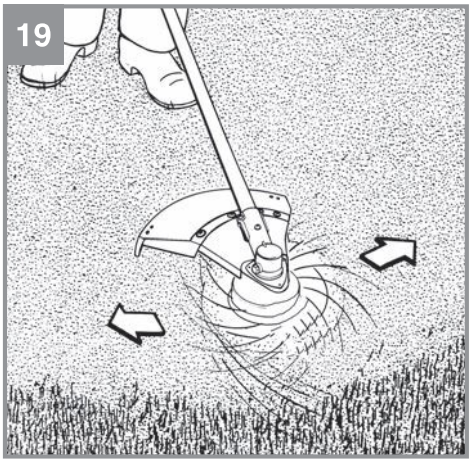

AnI_Agillo_18_200_SPK13.indb 6 19.11.2021 08:33:23

20

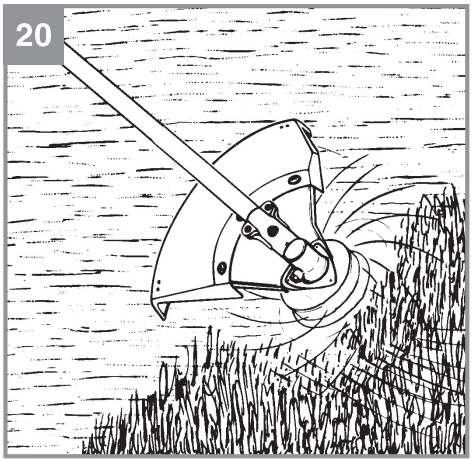

21

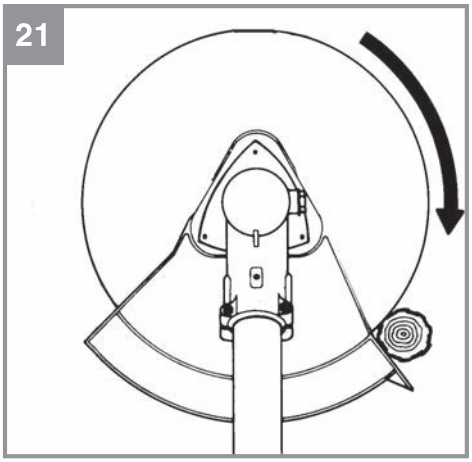

22



23

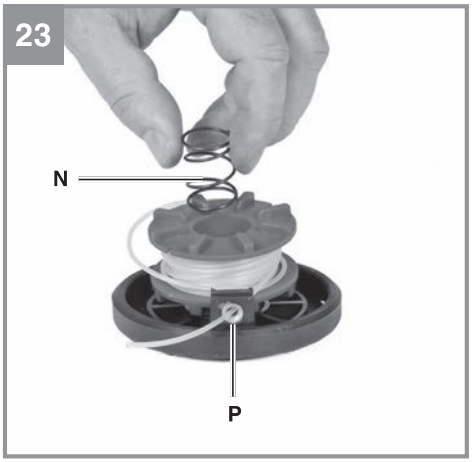

24



25



AnI_Agillo_18_200_SPK13.indb 7 19.11.2021 08:33:25

26



27



AnI_Agillo_18_200_SPK13.indb 8 19.11.2021 08:33:27

Danger!
When using the equipment, a few safety precautions must be observed to avoid injuries and damage. Please read the complete operating instructions and safety regulations with due care. Keep this manual in a safe place, so that the information is available at all times. If you give the equipment to any other person, hand over these operating instructions and safety regulations as well. We cannot accept any liability for damage or accidents which arise due to a failure to follow these instructions and the safety instructions.

Explanation of the warning signs on the equipment (Fig. 27):
1. Warning!
2. Read the directions for use before operating the equipment!
3. Wear protective headgear, goggles and ear muffs!
4. Wear sturdy, non-slip footwear!
5. Wear safety gloves!
6. Protect the equipment from rain and damp!
7. Be careful of objects being thrown out.
8. All bystanders must be kept at least 15 m from the machine!
9. The equipment continues to rotate!
10. Beware of recoil!
11. Do not use any saw blades.

1. Safety regulations

The corresponding safety information can be found in the enclosed booklet.
Warning!
Read all the safety information, instructions, illustrations and technical data provided on or with this power tool. Failure to adhere to the following instructions may result in electric shock, fire and/or serious injury.
Keep all the safety information and instructions in a safe place for future use.

This equipment is not allowed to be used by children. Children should be supervised so that they do not play with the equipment. Children are not allowed to carry out the cleaning or maintenance. This equipment is not allowed to be used by people with limited physical, sensory or mental capacities or by those with insufficient knowledge or experience unless they are supervised or instructed by a person who is responsible for them.

2. Layout and items supplied

2.1 Layout (Fig. 1/2)
1. Battery
2. On/Off switch
3. Safety lock-off
4. Strap attachment
5. Additional handle attachment
6. Top part of long handle
7. Handle connecting piece
8. Union nut
9. Bottom part of long handle
10. Motor housing
11. Spool housing
12. Locking lever
13. Line safety guard
14. Line cutter
15. Safety hood
16. Additional handle
17. Handle screw
18. Line spool
19. Line
20. Harness
21. Cutting blade
22. Multifunction tool
23. Pressure plate
24. Pressure plate cover
25. Hex nut M10, self-locking
26. Cable clips

2.2 Items supplied
Please check that the article is complete as specified in the scope of delivery. If parts are missing, please contact our service center or the sales outlet where you made your purchase at the latest within 5 working days after purchasing the product and upon presentation of a valid bill of purchase. Also, refer to the warranty table in the service information at the end of the operating instructions.
- Open the packaging and take out the equipment with care.
- Remove the packaging material and any packaging and/or transportation braces (if available).
- Check to see if all items are supplied.
- Inspect the equipment and accessories for transport damage.
- If possible, please keep the packaging until the end of the guarantee period.

Anl_Agillo_18_200_SPK13.indb 22 19.11.2021 08:33:50

Danger!
The equipment and packaging material are not toys. Do not let children play with plastic bags, foils or small parts. There is a danger of swallowing or suffocating!

- Top section of the trimmer with handle
- Bottom section of the trimmer with line spool
- Guard hood
- Steady grip
- Harness
- Cutting blade
- Multifunction tool
- Pressure plate
- Pressure plate cover
- Hex nut M10
- Cable clips (2x)
- Original operating instructions
- Safety instructions

3. Proper use

Used as a cordless scythe (using the cutting blade) the equipment is designed for cutting young trees, strong weeds and light undergrowth.
Used as a cordless grass trimmer (using the line spool with cutting line) the equipment is designed for cutting lawns, grassed areas and small weeds. It is not designed to be used for public facilities, parks, sports centers, along roadways, or in agriculture and forestry.
The operating instructions as supplied by the manufacturer must be obeyed to ensure that the equipment is used properly.

Important! Due to the high risk of bodily injury to the user, the equipment is not allowed to be used to clean paths or to chop up tree and hedge clippings. Similarly, the equipment must not be used to level out high areas such as molehills. For safety reasons, the equipment must not be used as a drive unit for other work tools or toolkits of any kind.

The equipment is to be used only for its prescribed purpose. Any other use is deemed to be a case of misuse. The user / operator and not the manufacturer will be liable for any damage or injuries of any kind caused as a result of this.

Please note that our equipment has not been designed for use in commercial, trade or industrial applications. Our warranty will be voided if the machine is used in commercial, trade or industrial businesses or for equivalent purposes.

Caution!
Residual risks
Even if you use this electric power tool in accordance with the instructions, certain residual risks cannot be eliminated. The following hazards may arise in connection with the equipment's construction and layout:

- Lung damage if no suitable protective dust mask is used.
- Damage to hearing if no suitable ear protection is applied.
- Health damage caused by hand-arm vibrations if the equipment is used over a longer period or is not properly guided and maintained.
- Injury and damage to property caused by flying parts.
- Cut injuries if no suitable safety clothing is used.

Danger!
The electric power tool generates an electromagnetic field during operation. Under certain circumstances this field may actively or passively impede medical implants. To reduce the risk of serious or fatal injuries, we recommend persons with medical implants to consult their doctor and the manufacturer of the medical implant prior to using the equipment.

4. Technical data

Voltage	18 V d.c.
Speed n_0	7500 min^{-1}
Cutting circle diameter of line	Ø 30 cm
Line length	8 m
Line diameter	2.0 mm
Cutting circle diameter of blade	Ø 20 cm
Protection class	III
Sound power level L_{WA}	93.1 dB (A)
Sound pressure level L_{pA}	81.8 dB (A)
Uncertainty K	2.05 dB
Guaranteed sound power level L_{WA}	95 dB (A)
Vibration a_h	2.744 m/s^2
Uncertainty K	1.5 m/s^2
Weight	7.0 kg

AnI_Agillo_18_200_SPK13.indb 23 19.11.2021 08:33:51

Important!
The equipment is supplied without batteries and without a charger and is allowed to be used only with the lithium-ion batteries of the Power X-Change series!

The lithium-ion batteries of the Power X-Change series are allowed to be charged only with the Power-X charger.

The machine noise might exceed 85 dB (A). The operator will require noise protection measures if this is the case. The noise is measured in accordance with ISO 22868. The value of the vibrations emitted by the handle was determined in accordance with ISO 22867.

Important!
The vibration value changes according to the area of application of the electric equipment and may exceed the specified value in exceptional circumstances.

Keep the noise emissions and vibrations to a minimum.
- Only use appliances which are in perfect working order.
- Service and clean the appliance regularly.
- Adapt your working style to suit the appliance.
- Do not overload the appliance.
- Have the appliance serviced whenever necessary.
- Switch the appliance off when it is not in use.
- Wear protective gloves.
- Wear eye and hearing protection

5. Before starting the equipment

The equipment is supplied without batteries and without a charger!

Caution! Carry out all the following assembly and adjustment work without rechargeable batteries –risk of injury. Wear protective gloves.

5.1 Fitting the guard hood (Fig. 3)
Remove the socket head screw from the guard hood. Push the guard hood (15) onto the mount on the motor housing as far as it will go and screw it securely in place with the previously removed socket head screw (Fig. 3). A blade (Fig. 2/ Item 14) on the underside of the guard hood automatically cuts the cutting line to the optimum length. This is provided with a safety guard. Remove the safety guard before starting work.

5.2 Fitting the additional handle (Fig. 4a-4d)
Undo the handle screw (Fig. 2/Item 17) and remove the thrust piece (Fig. 2/Item 5). Fit the additional handle (16) into the holder (A) such that the plastic ring (B) lies in the groove (N) on the holder (A) (see detailed drawing 4a).
Caution! The additional handle is wrongly fitted if the plastic ring (B) lies outside the groove (N) as shown in the detailed drawing 4b. This mistake can result in damage to the additional handle during use.
Fasten the additional handle (16) to the thrust piece (5) by re-tightening the handle screw (17). Use the two supplied cable clips (26) to fasten the protective tubing for the cable.

5.3 Fitting the long handle (Fig. 5)
Slot the top part of the long handle (6) into the bottom part of the long handle (9). Screw the handle connecting piece (7) to the top part of the long handle with the union nut (8) on the bottom part of the long handle.

5.4 Adjusting the angle of the additional handle (Fig. 4c)
To adjust the additional handle to the optimum working angle, slacken the handle screw (17). Set the desired tilt of the additional handle (16). Tighten the handle screw (17) again.

5.5 Removing/fitting the cutting line unit (Fig. 6)
Note: The equipment is supplied from the factory ready for operation with the cutting line.
Warning! Take care not to cut yourself on the cutting line cutter.

a) Removing the cutting line unit
Press the locking lever (12) and turn the cutting line unit (C) clockwise (a) at the same time until the locking lever latches in place. Turn the cutting line unit clockwise (a) and take it off the motor shaft.

b) Fitting the cutting line unit
Press the locking lever (12) and turn the cutting line unit (C) counterclockwise (b) onto the motor shaft at the same time until the locking lever latches in place. Turn the line cutting unit on the motor shaft until it is tightly secured. Check whether the cutting line unit can rotate freely after you let go of the locking lever. If this is not the case, have the mechanism checked by an expert.

AnI_Agillo_18_200_SPK13.indb 24 19.11.2021 08:33:51

5.6 Guard hood for use with the cutting blade (Fig. 7)

Caution! The cutting line cover (D) must be removed if you want to work with the cutting blade. Take care not to cut yourself on the cutting line cutter.
Slacken the two retaining screws (E) on the cutting line cover.
Start at the side and carefully press in the lugs (F) and pull the cutting line cover (D) up and off.

5.7 Guard hood for use with the cutting line (Fig. 7)

Caution! The cutting line cover (D) must be fitted if you want to work with the cutting line. Take care not to cut yourself on the cutting line cutter. Start at the side and press the lugs (F) of the cutting line cover back in and secure them with the two screws (E).

5.8 Fitting/removing the cutting blade

The procedure for fitting the cutting blade is shown in Figs. 8a - 8d. Note the detailed drawing 8e. **Warning!** Take care not to cut yourself on the cutting blade.

a) Fitting the cutting blade

Important! If the spacer between the cutting blade and the motor housing (detailed drawing 8e / fig. 8a / Item 27) slips off the motor shaft (M) during dismantling, push it back onto the motor shaft as shown in the drawing.

1. Fit the cutting blade (21) in place.
2. The pressure plate (23) must be fitted with the higher edge facing the cutting blade (detailed drawing 8d).
3. Fit the pressure plate cover (24).
4. Screw the size M10 hex nut (25) in place. **Warning!** For safety reasons, self-locking nuts are allowed to be used only once without exception.
5. Press the locking lever (12) and lock the motor shaft. Tighten the hex nut using the multifunction tool (22).
6. Check whether the blade (21) can rotate freely after you let go of the locking lever. If this is not the case, have the mechanism checked by an expert.

b) Removing the cutting blade

Press the locking lever and lock the motor shaft. Unscrew and the hex nut and remove the pressure plate cover, pressure plate and cutting blade.

Each time before use, check the following :

- That the equipment is in perfect condition and that the safety devices and cutting devices are complete.
- That all screws are securely fastened.
- That all moving parts move smoothly.

5.9 Using the harness

Caution! Always use the harness when working with the equipment (Fig. 2/Item 20). Always switch off the equipment before you release the harness – risk of injury!

- Fit the harness (Fig. 9)
- Hook the equipment to the harness (Fig. 10).
- Adjust to the perfect working and cutting position using the various harness adjusters on the harness. The strap attachment (Fig. 11/ Item 4) can be moved on the top part of the long handle if required. To do so, slacken the wing nut on the strap attachment, move the strap attachment and then re-tighten the wing nut.
- To establish the optimum length of the harness, you should then make a few swinging movements without starting the motor (Fig. 12).

The harness is fitted with a quick-release mechanism. Pull the red part of the harness (Fig. 13) if you need to remove the equipment quickly.

5.10 Installing the battery

Push the rechargeable batteries into the battery mounts provided on the left and right on the equipment (Fig. 2/Item 1). The battery will be heard to click into place when it has been pushed fully in (Fig. 1). To take out the battery, press the pushlock button (Fig. 15/Item K) and remove the battery.

5.11 Charging the battery (Fig. 15a)

1. Take the battery pack out of the equipment. Do this by pressing the pushlock button.
2. Check that your mains voltage is the same as that marked on the rating plate of the battery charger. Insert the power plug of the charger into the socket outlet. The green LED will then begin to flash.
3. Insert the battery pack into the charger.
4. In the section entitled „Charger indicator“ you will find a table with an explanation of the LED indicator on the charger.

AnI_Agillo_18_200_SPK13.indb 25 19.11.2021 08:33:51

The battery pack can become a little warm during the charging. This is normal.

If the battery pack fails to charge, check:
- whether there is voltage at the socket outlet
- whether there is good contact at the charging contacts

If the battery pack still fails to charge, send
- the charging unit
- and the battery pack

to our customer service center.

To ensure that items are properly packaged and delivered when you send them to us, please contact our customer service or the point of sale at which the equipment was purchased.

When shipping or disposing of batteries and cordless tools, always ensure that they are packed individually in plastic bags to prevent short circuits and fires.

To ensure that the battery pack provides long service, you should take care to recharge it promptly. You must recharge the battery pack when you notice that the performance of the device drops. Never allow the battery pack to become fully discharged. This will cause it to develop a defect.

5.12 Battery capacity indicator (Fig. 15b)
Press the button for the battery capacity indicator (Item H). The battery capacity indicator (Item F) shows the charge status of the battery using 3 LEDs.

All 3 LEDs are lit:
The battery is fully charged.

2 or 1 LED(s) are lit:
The battery has an adequate remaining charge.

1 LED flashes:
The battery is empty, recharge the battery.

All LEDs blink:
The battery temperature is too low. Remove the battery from the equipment, keep it at room temperature for one day. If the fault reoccurs, this means that the rechargeable battery has undergone exhaustive discharge and is defective. Remove the battery from the equipment. Never use or charge a defective battery.

6. Operation

Please note that the statutory regulations governing noise abatement may differ from one location to another.

Danger! The guard hood must be fitted when carrying out work.

6.1 Switching the equipment on and off, adjusting the speed (Fig. 16)

Switching on and setting the speed
Press the safety lock-off (3) and press the On/Off switch (2) at the same time. Adjust the speed during operation by pressing the On/Off switch to a greater or lesser extent. The harder you push, the higher the speed.

Switching off
Release the On/Off switch.

6.2 Practical tips
Practice all the work steps with the motor switched off and without the rechargeable battery before you start to use the equipment. Only use the cutting line to mow grass that is dry. If the grass is long, the grass must be cut shorter in stages (Fig. 17).

Extending the cutting line (Fig. 18)
Danger! Do not use any kind of metal wire or metal wire encased in plastic in the line spool. This may cause serious injuries to the user.

The grass trimmer has a semi-automatic line extension system (automatic jog line feed). Each time you activate the semi-automatic line extension system, the line is automatically extended to ensure that you can cut your lawn with the perfect cutting width at all times. To extend the cutting line, run the motor and tap the line spool on the ground. This will automatically extend the line. The blade on the guard hood will cut the line to the permissible length. Please note that the more often you activate the semi-automatic line extension system, the more the line will wear.

Note: If the line is too long when you use the equipment for the first time, the surplus end of it will be cut by the blade on the guard hood. If the line is too short when you start the equipment for the first time, press the knob on the line spool and pull the line hard. When you then start the

Anl_Agillo_18_200_SPK13.indb 26 19.11.2021 08:33:52

machine for the first time the line will be cut to the perfect length automatically.

Using a brush or similar, carefully remove all residual grass from the underside of the guard hood at regular intervals.

Different cutting methods
When the equipment is correctly assembled it will cut weeds and long grass in places which are difficult to access, e.g. along fences, walls and foundations and also around trees. It can also be used for „mowing“ down vegetation so that a garden can be better prepared or a certain area cleared down to the soil.

Please note: Even if it is used carefully, cutting around foundations, stone or concrete walls, etc. will result in the line suffering above normal wear.

Trimming/mowing
Swing the trimmer from side to side in a scything motion. Always keep the line spool parallel to the ground. Check the site and decide which cutting height you require. Guide and hold the line spool at the required height to obtain an even cut (Fig. 19).

Low trimming
Hold the trimmer right in front of you at a slight angle so that the underside of the line spool is above the ground and the line strikes the correct target. Always cut away from yourself. Never draw the trimmer towards yourself.

Cutting along fences/foundations
Approach wire mesh fences, lath fences, natural stone walls and foundations slowly so that you can cut close to them without striking the obstacle with the line. If, for example, the line strikes stones, stone walls or foundations, it will wear or fray. If the line strikes wire fencing, it will break.
Trimming around trees
When trimming around tree trunks, approach slowly so that the line does not strike the bark. Walk around the tree, cutting from left to right. Approach grass or weeds with the tip of the line and tilt the line spool forwards slightly.
Warning: Take extreme care during mowing work. When doing such work keep a distance of 30 meters between yourself and other people or animals.

Mowing
When mowing down to the ground you will cut all the vegetation. To do this, set the line spool at an angle of 30° to the right. Place the handle in the required position. Remember the increased risk of injury to the user, watchers and animals, and the danger of damaging property due to objects (for example stones) being thrown up (Fig. 20).

Warning: Do not use the equipment to remove objects from footpaths, etc!
The equipment is a powerful tool and can throw small stones and other objects a distance of 15 meters or more, causing injuries and damage to cars, houses and windows.

Sawing
The equipment is not suitable for sawing.

Jamming
If the cutting blade jams as a result of attempting to cut vegetation that is too dense, switch off the motor immediately. Remove the grass and scrub from the equipment before you restart it.

Preventing recoil
When you work with the blade, there is a risk of recoil if it strikes solid objects (tree trunks, branches, tree stumps, stones or the like). This will throw the equipment backwards in the direction opposite to the rotation of the tool. This can cause you to lose control of the equipment. Do not use the blade near fences, metal posts, boundary stones or foundations.
For cutting dense stalks, position the blade as shown in Fig. 21 to prevent recoil.

7. Cleaning, maintenance and ordering of spare parts

Danger!
Before putting away or cleaning the grass trimmer, switch off and remove the battery pack.

7.1 Cleaning

- Keep all safety devices, air vents and the motor housing free of dirt and dust as far as possible. Wipe the equipment with a clean cloth or blow it with compressed air at low pressure.
- We recommend that you clean the device immediately each time you have finished using it.

Anl_Agillo_18_200_SPK13.indb 27 19.11.2021 08:33:52

- Clean the equipment regularly with a moist cloth and some soft soap. Do not use cleaning agents or solvents; these could attack the plastic parts of the equipment. Ensure that no water can seep into the device. The ingress of water into an electric tool increases the risk of an electric shock.
- Use a brush to remove deposits from the safety guard

7.2 Replacing the line spool
Danger! Remove the battery packs!
1. Fig. 22 Press the line spool housing together at the points marked M and remove the spool cover.
2. Take out the empty line spool and the pressure spring.
3. Fig. 23 Thread the end of the line on the new line spool through the eyelet (P) in the spool cover and allow approx. 13 cm of line to project. Insert the pressure spring (N) in the line spool.
4. Press the spool cover back into the line spool housing.

7.3 Replacing the cutting line
Danger! Remove the battery packs!
1. Fig. 22 Press the line spool housing together at the points marked M and remove the spool cover.
2. Take out the empty line spool and the pressure spring.
3. Remove any remaining cutting line if there is any.
4. Fig. 24 Insert the new cutting line through the line mount inside the spool.
5. Wind the line with tension in a counter-clockwise direction.
6. Fig. 25 Hook the line, approx. 15 cm before the end of the line, into one of the line holders on the edge of the spool.
7. Fig. 23 Thread the end of the line on the new line spool through the eyelet (P) in the spool cover. Insert the pressure spring (N) in the line spool.
8. Pull the line sharply to release it from the line holder.
9. Press the spool cover back into the line spool housing.

When you start the equipment again the line will be cut to the perfect length automatically.

Caution! Bits of the nylon line could cause injury when flung out!

7.4 Sharpening the guard hood blade
The guard hood blade (Fig. 2/Item 14) can become blunt over time. When you notice this, undo the screw holding the guard hood blade on the guard hood. Clamp the blade in a vise. Sharpen the blade with a flat file and make sure that the angle of the cutting edge is not altered in the process. File in one direction only.

7.5 Maintenance
There are no parts inside the equipment which require additional maintenance.

7.6 Ordering replacement parts:
Please quote the following data when ordering replacement parts:
- Type of machine
- Article number of the machine
- Identification number of the machine
- Replacement part number of the part required

For our latest prices and information please go to www.Einhell-Service.com

Spare line spool Art. No.: 34.050.96
Spare cutting blade Art. No.: 34.050.83

8. Disposal and recycling

The equipment is supplied in packaging to prevent it from being damaged in transit. The raw materials in this packaging can be reused or recycled. The equipment and its accessories are made of various types of material, such as metal and plastic. Never place defective equipment in your household refuse. The equipment should be taken to a suitable collection center for proper disposal. If you do not know the whereabouts of such a collection point, you should ask in your local council offices.

9. Storage and transport

Remove the batteries. Store the equipment and its accessories in a dark and dry place at above freezing temperature. The ideal storage temperature is between 5 and 30 °C. Store the electric equipment in its original packaging.

The equipment has an integrated wall holder (Fig. 26/Item L) to enable it to be hung on the wall.

AnI_Agillo_18_200_SPK13.indb 28 19.11.2021 08:33:52

- Always hold the equipment with one hand on the handle and the other hand on the additional handle. Do not carry the equipment by its motor housing.
- Secure the equipment against slipping if you transport it in a vehicle.
- As far as possible, use the original packaging for transporting the equipment.
- Use a transport guard for metal blades during transport and storage.

10. Faults

The equipment does not work:
Check that the battery is charged and whether the charging unit is working. If the equipment will not work in spite of the voltage supply being OK, please send it to the customer service address below.

Anl_Agillo_18_200_SPK13.indb 29 19.11.2021 08:33:52

11. Charger indicator

Indicator status		Explanations and actions
Red LED	**Green LED**	
Off	Flashing	**Ready for use** The charger is connected to the mains and is ready for use; there is no battery pack in the charger
On	Off	**Charging** The charger is charging the battery pack in quick charge mode. The charging times are shown directly on the charger. **Important!** The actual charging times may vary slightly from the stated charging times depending on the existing battery charge.
Off	On	**The battery is charged and ready for use.** The unit then changes over to gentle charging mode until the battery is fully charged. To do this, leave the rechargeable battery on the charger for approx. 15 minutes longer. **Action:** Take the battery pack out of the charger. Disconnect the charger from the mains supply.
Flashing	Off	**Adapted charging** The charger is in gentle charging mode. For safety reasons the charging is performed less quickly and takes more time. The reasons can be: - The rechargeable battery has not been used for a very long time. - The battery temperature is outside the ideal range. **Action:** Wait for the charging to be completed; you can still continue to charge the battery pack.
Flashing	Flashing	**Fault** Charging is no longer possible. The battery pack is defective. **Action:** Never charge a defective battery pack. Take the battery pack out of the charger.
On	On	**Temperature fault** The battery pack is too hot (e.g. due to direct sunshine) or too cold (below 0° C). **Action:** Remove the battery pack and keep it at room temperature (approx. 20° C) for one day .

AnI_Agillo_18_200_SPK13.indb 30 19.11.2021 08:33:53



For EU countries only

Never place any electric power tools in your household refuse.

To comply with European Directive 2012/19/EC concerning old electric and electronic equipment and its implementation in national laws, old electric power tools have to be separated from other waste and disposed of in an environment-friendly fashion, e.g. by taking to a recycling depot.

Recycling alternative to the return request:
As an alternative to returning the equipment to the manufacturer, the owner of the electrical equipment must make sure that the equipment is properly disposed of if he no longer wants to keep the equipment. The old equipment can be returned to a suitable collection point that will dispose of the equipment in accordance with the national recycling and waste disposal regulations. This does not apply to any accessories or aids without electrical components supplied with the old equipment.

The reprinting or reproduction by any other means, in whole or in part, of documentation and papers accompanying products is permitted only with the express consent of the Einhell Germany AG.

Subject to technical changes

Anl_Agillo_18_200_SPK13.indb 31 19.11.2021 08:33:53

Service information

We have competent service partners in all countries named on the guarantee certificate whose contact details can also be found on the guarantee certificate. These partners will help you with all service requests such as repairs, spare and wearing part orders or the purchase of consumables.

Please note that the following parts of this product are subject to normal or natural wear and that the following parts are therefore also required for use as consumables.

Category	Example
Wear parts*	Rechargeable battery, line spool holder
Consumables*	Line spool, cutting blade
Missing parts	

* Not necessarily included in the scope of delivery!

In the effect of defects or faults, please register the problem on the internet at www.Einhell-Service.com. Please ensure that you provide a precise description of the problem and answer the following questions in all cases:

- Did the equipment work at all or was it defective from the beginning?
- Did you notice anything (symptom or defect) prior to the failure?
- What malfunction does the equipment have in your opinion (main symptom)? Describe this malfunction.

Anl_Agillo_18_200_SPK13.indb 32 19.11.2021 08:33:53

Warranty certificate

Dear Customer,
All of our products undergo strict quality checks to ensure that they reach you in perfect condition. In the unlikely event that your device develops a fault, please contact our service department at the address shown on this guarantee card. You can also contact us by telephone using the service number shown. Please note the following terms under which guarantee claims can be made:

1. These guarantee terms apply to consumers only, i.e. natural persons intending to use this product neither for their commercial activities nor for any other self-employed activities. These warranty terms regulate additional warranty services, which the manufacturer mentioned below promises to buyers of its new products in addition to their statutory rights of guarantee. Your statutory guarantee claims are not affected by this guarantee. Our guarantee is free of charge to you.
2. The warranty services cover only defects due to material or manufacturing faults on a product which you have bought from the manufacturer mentioned below and are limited to either the rectification of said defects on the product or the replacement of the product, whichever we prefer.
   Please note that our devices are not designed for use in commercial, trade or professional applications. A guarantee contract will not be created if the device has been used by commercial, trade or industrial business or has been exposed to similar stresses during the guarantee period.
3. The following are not covered by our guarantee:
   - Damage to the device caused by a failure to follow the assembly instructions or due to incorrect installation, a failure to follow the operating instructions (for example connecting it to an incorrect mains voltage or current type) or a failure to follow the maintenance and safety instructions or by exposing the device to abnormal environmental conditions or by lack of care and maintenance.
   - Damage to the device caused by abuse or incorrect use (for example overloading the device or the use or unapproved tools or accessories), ingress of foreign bodies into the device (such as sand, stones or dust, transport damage), the use of force or damage caused by external forces (for example by dropping it).
   - Damage to the device or parts of the device caused by normal or natural wear or tear or by normal use of the device.
4. The guarantee is valid for a period of 24 months starting from the purchase date of the device. Guarantee claims should be submitted before the end of the guarantee period within two weeks of the defect being noticed. No guarantee claims will be accepted after the end of the guarantee period. The original guarantee period remains applicable to the device even if repairs are carried out or parts are replaced. In such cases, the work performed or parts fitted will not result in an extension of the guarantee period, and no new guarantee will become active for the work performed or parts fitted. This also applies if an on-site service is used.
5. To make a claim under the guarantee, please register the defective device at:
   www.Einhell-Service.com. Please keep your bill of purchase or other proof of purchase for the new device. Devices that are returned without proof of purchase or without a rating plate shall not be covered by the guarantee, because appropriate identification will not be possible. If the defect is covered by our guarantee, then the item in question will either be repaired immediately and returned to you or we will send you a new replacement.

Of course, we are also happy offer a chargeable repair service for any defects which are not covered by the scope of this guarantee or for units which are no longer covered. To take advantage of this service, please send the device to our service address.

Also refer to the restrictions of this warranty concerning wear parts, consumables and missing parts as set out in the service information in these operating instructions.

Anl_Agillo_18_200_SPK13.indb 33 19.11.2021 08:33:53

CE EU

D Konformitätserklärung: Wir erklären Konformität gemäß EU-Richtlinie und Normen für Artikel
GB Declaration of conformity: We declare conformity in accordance with the EU directive and standards for article
F Déclaration de conformité : Nous déclarons la conformité conformément aux directives et normes UE pour l'article
I Dichiarazione di conformità: dichiariamo la conformità secondo la direttiva UE e le norme per l'articolo
DK Overensstemmelseserklæring: Vi attesterer overensstemmelse iht. EU-direktiv samt standarder for artikel
S Försäkran om överensstämmelse: Vi förklarar följande överensstämmelse enl. EU-direktiv och standarder för artikeln
CZ Prohlášení o shodě: Prohlašujeme shodu podle směrnice EU a norem pro výrobek
SK Vyhlásenie o zhode: Vyhlasujeme zhodu podľa smernice EÚ a noriem pre výrobok
NL Conformiteitsverklaring: wij verklaren conformiteit conform EU-richtlijn en normen voor artikel
E Declaración de conformidad: declaramos la conformidad a tenor de la directiva y normas de la UE para el artículo
FIN Standardinmukaisuustodistus: Me vakuutamme, että EU-direktiivin ja standardien vaatimukset täyttyvät tuotteelle
SLO IZJAVA O SKLADNOSTI potrjuje sledečo skladnost s smernico EU in standardi za izdelek
H Konformitási nyilatkozat: Az EU-irányvonal és normák szerinti konformitást jelentjük ki a cikkekhez
RO Declarație de conformitate: Declarăm conformitate conform directivei şi normelor UE pentru articolul
GR Δήλωση συμμόρφωσης: Δηλώνουμε συμμόρφωση σύμφωνα με Οδηγία Ε ε και πρότυπα για τα προϊόντα
P Declaração de conformidade: Declaramos a conformidade de acordo com a diretiva CE e normas para o artigo
HR IZJAVA O SUKLADNOSTI potvrđuje sljedeću usklađenost prema smjernicama EU i normama za artikl
BIH IZJAVA O SUKLADNOSTI potvrđuje sljedeću usklađenost prema smjernicama EU i normamaza artikl
RS DEKLARACIJA O USUGLAŠENOST potvrđuje sledeću usklađenost prema smernicama EZ i normama za artikal
TR Uygunluk Deklarasyonu: AB direktifi ve ürün standartları uyarınca uygunluğunu beyan ederiz
RUS Заявление о соответствии товара: Настоящим удостоверяется, что следующие продукты соответствуют директивам и нормам ЕС
EE Vastavusdeklaratsioon: Tõendame toote vastavust EL direktiivile ja standarditele
LV Atbilstības deklarācija: Mēs apliecinām atbilstību ES direktīvai un standartiem tālāk minētajām precēm
LT Atitikties deklaracija: deklaruojame, kad gaminys atitinka ES direktyvą ir standartus
PL Deklaracja Zgodności - deklarujemy zgodność wymienionego poniżej artykułu z następującymi normami na podstawie dyrektywy EU
BG Декларация за съответствие: Ние декларираме съответствие на Директивите и нормите (ЕС) за изделия
UKR Декларація відповідності: ми заявляємо про відповідність згідно з Директивою ЄС та стандартами стосовно артикула
MK Изјава за сообразност: Изјавуваме сообразност со регулативата и со нормите на ЕУ за артикли
N Samsvarserklæring: Vi erklærer samsvar i henhold til EU-direktiv og standarder for artikkel
IS Samræmisyfirlýsing: Við útskurðum samræmi við EU-reglugerð og stöðlum fyrir vörutegund

Akku-Sense* AGILLO 18/200 (Einhell)

☐ **2014/29/EU**
☐ **2005/32/EC_2009/125/EC**
☐ **(EU)2015/1188**
☐ **2014/35/EU**
☐ **2006/28/EC**
☒ **2014/30/EU**
☐ **2014/32/EU**
☐ **2014/53/EU**
☐ **2014/68/EU**
☐ **(EU)2016/426**
Notified Body:
☐ **(EU)2016/425**
☒ **2011/65/EU_(EU)2015/863**

☒ **2006/42/EC**
☐ **Annex IV**
Notified Body:
Reg. No.:
☒ **2000/14/EC_2005/88/EC**
☐ **Annex V**
☒ **Annex VI**
Noise: measured L_{WA} = 93,1 dB (A); guaranteed L_{WA} = 95 dB (A)
P = KW; L/Ø = 30 cm
Notified Body: TÜV Süd Industrie Service GmbH (NB 0036)
☐ **2012/46/EU**
Emission No.:

Standard references: EN 60745-1; EN 60335-1; EN 50636-2-91; EN 62233; EN ISO 11806-1; EN 55014-1; EN 55014-2

ISC GmbH · Eschenstraße 6 · D-94405 Landau/Isar

Landau/Isar, den 26.05.2020

Andreas Weichselgartner/General-Manager

Nigel Yang/Product-Management

First CE: 2020
Art.-No.: 34.113.10 I.-No.: 21010
Subject to change without notice

Archive-File/Record: NAPR020796
Documents registrar: Josef Landauer
Wiesenweg 22, D-94405 Landau/Isar

* *GB* Cordless scythe · *F* Débroussailleuse sans fil · *I* Decespugliatore a batteria · *DK/N* Akku-le · *S* Batteridriven röjsåg · *CZ* Akumulátorová kosa · *SK* Akumulátorová kosa · *NL* Accu-zeis · *E* Desbrozadora inalámbrica · *FIN* Akkuviikate · *SLO* Akumulatorska kosa · *H* Akkus-fűkasza · *RO* Cositoare cu acumulator · *GR* Δρεπάνι μπαταρίας · *P* Foice elétrica sem fio · *HR/BIH* Akumulatorski šišač trave · *RS* Akumulatorski trimer za travu · *PL* Kosa akumulatorowa · *TR* Akülü tırpan · *RUS* Аккумуляторная косилка · *EE* Akutrimmer · *LV* Akumulatora trimmeris · *LT* Akumuliatorinis dalgis · *BG* Акумулаторен тример · *UKR* Акумуляторна коса · *MK* Коса на батерии

AnI_Agillo_18_200_SPK13.indb 257 19.11.2021 08:34:39