GE-CL 36/230 Li E

D **Originalbetriebsanleitung**
Akku-Laubsauger

GB **Original operating instructions**
Cordless blower vac

F **Instructions d'origine**
Aspirateur de feuilles sans fil

I **Istruzioni per l'uso originali**
Aspiratore di foglie a batteria

DK/N **Original betjeningsvejledning**
Akku-løvsuger

S **Original-bruksanvisning**
Batteridriven lövsug

CZ **Originální návod k obsluze**
Akumulátorový sběrač listí

SK **Originálny návod na obsluhu**
Akumulátorový vysávač lístia

NL **Originele handleiding**
Accu-bladzuiger

E **Manual de instrucciones original**
Aspirador de hojas con batería

FIN **Alkuperäiskäyttöohje**
Akkukäyttöinen lehti-imuri

H **Eredeti használati utasítás**
Akkus-lombszívó

GR **Πρωτότυπες Οδηγίες χρήσης**
Ναρροφητης φυλλων, με μπαταρια

9

Art.-Nr.: 34.336.30 **I.-Nr.: 21021**

1a

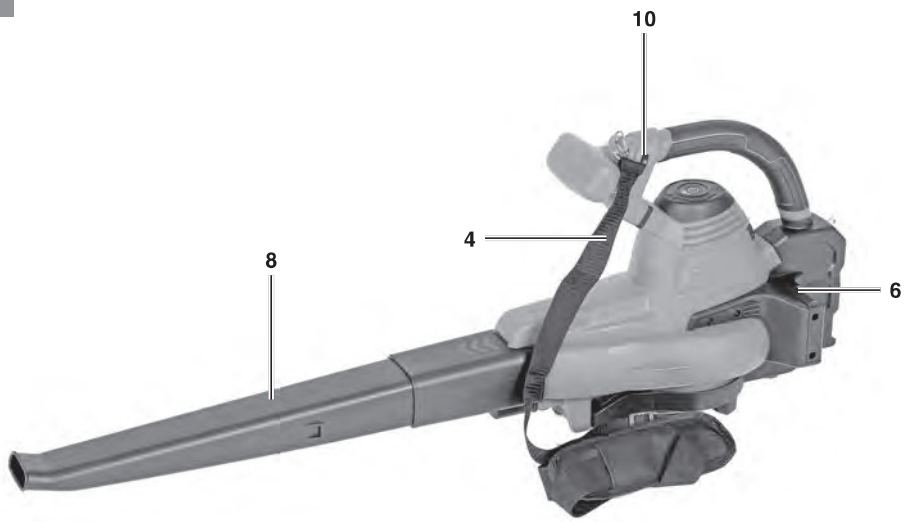

1b

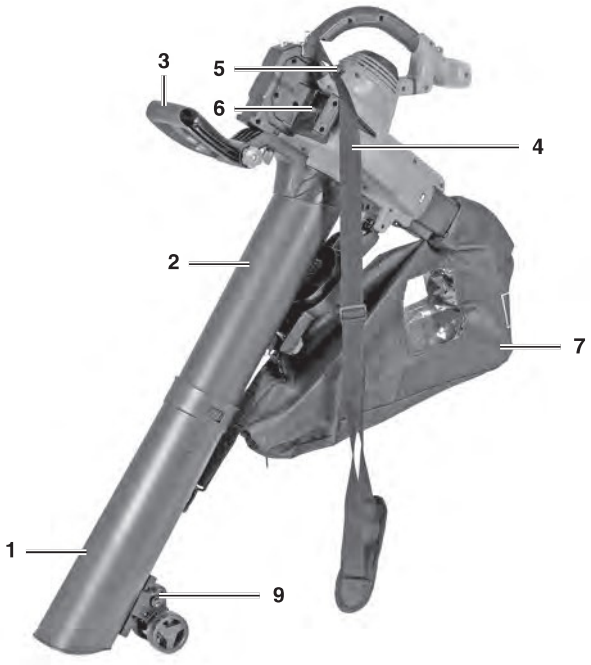

Anl_GE_CL_36_230_Li_E_Solo_SPK9.indb 2 31.08.2021 07:34:31

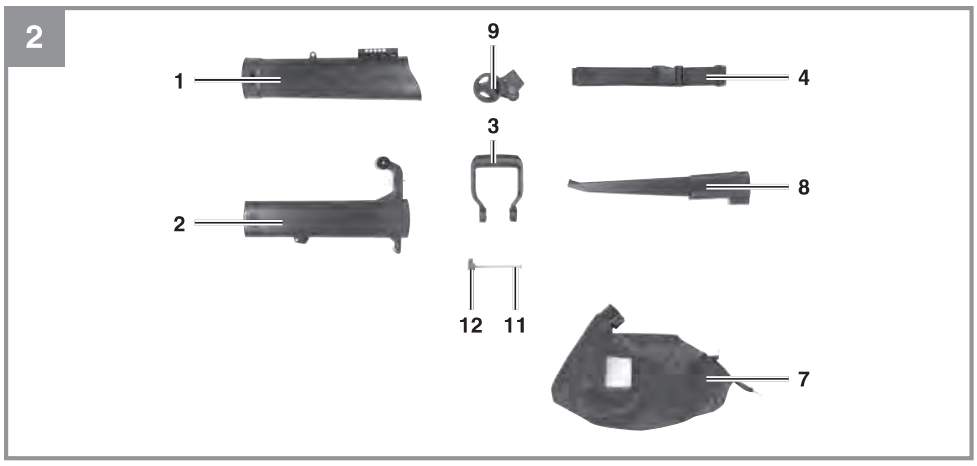

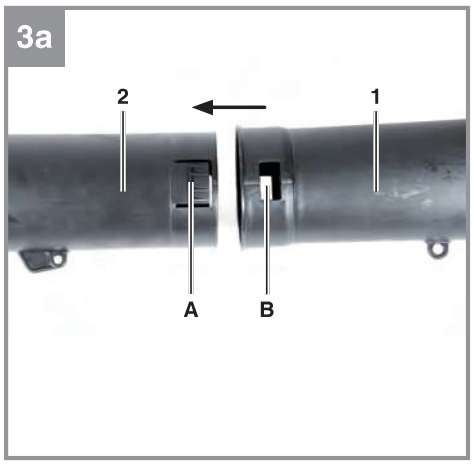

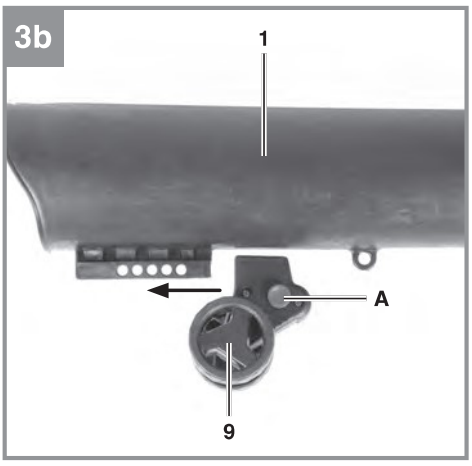

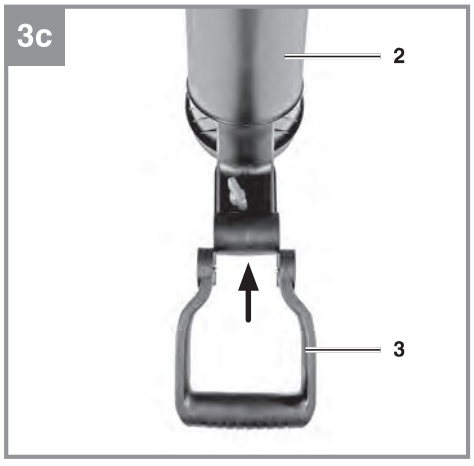

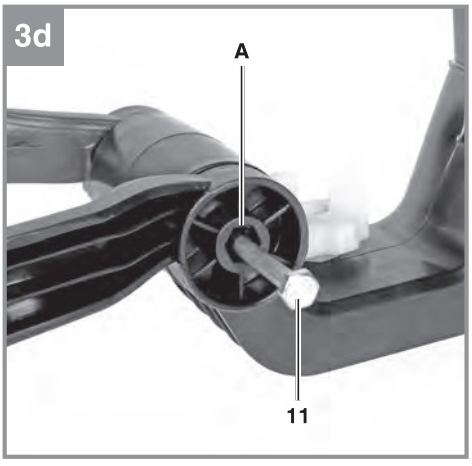

Anl_GE_CL_36_230_Li_E_Solo_SPK9.indb 3 31.08.2021 07:34:32

3e



3f

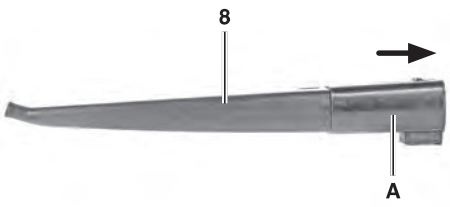

4a

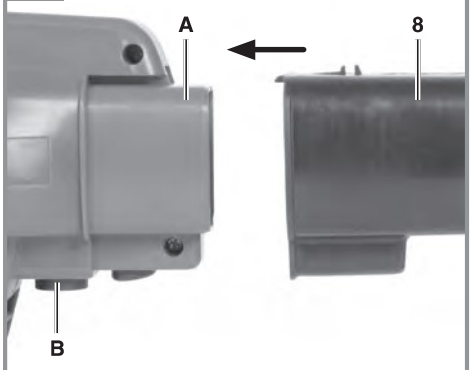

4b

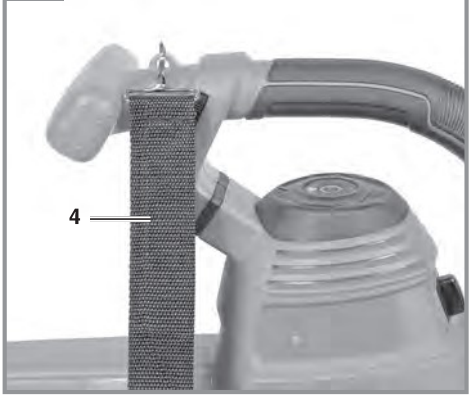

5a

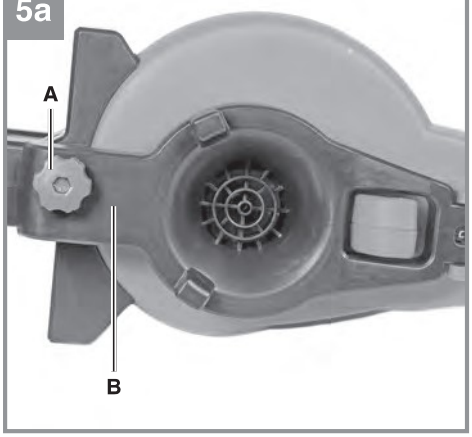

5b

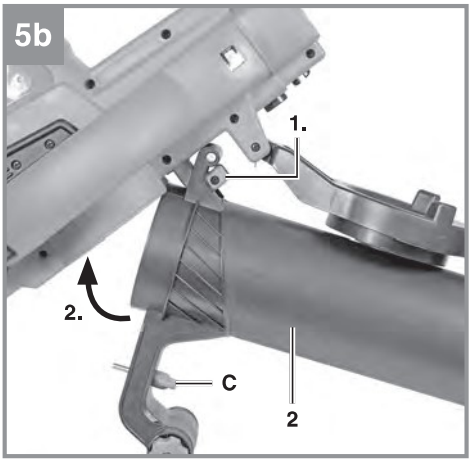

Anl_GE_CL_36_230_Li_E_Solo_SPK9.indb 4 31.08.2021 07:34:35

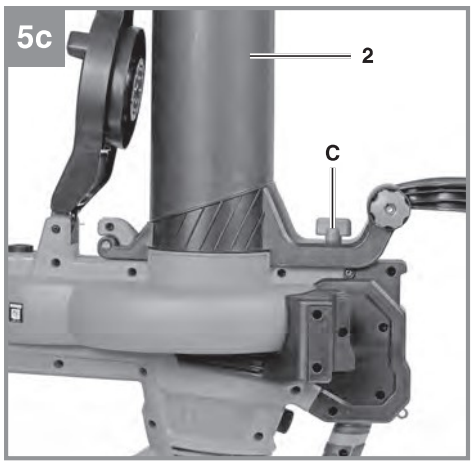

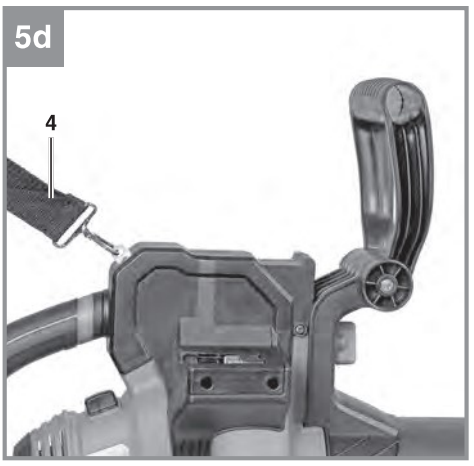

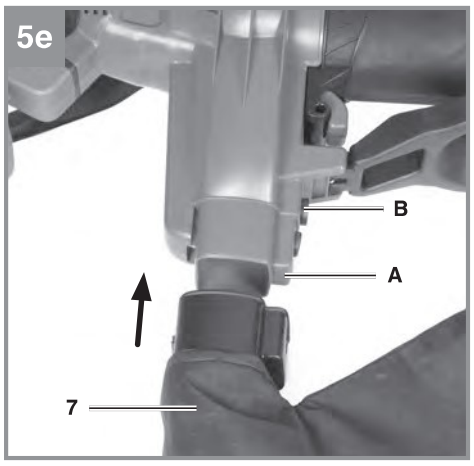



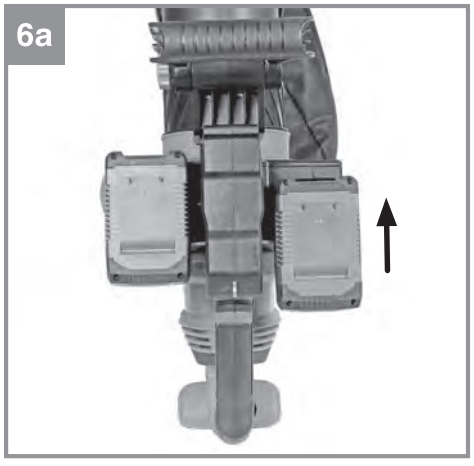



Anl_GE_CL_36_230_Li_E_Solo_SPK9.indb 5 31.08.2021 07:34:40

7



8

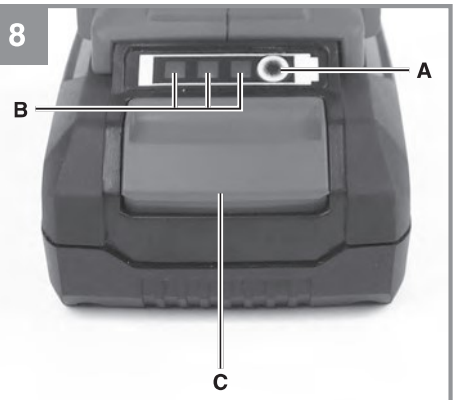

9

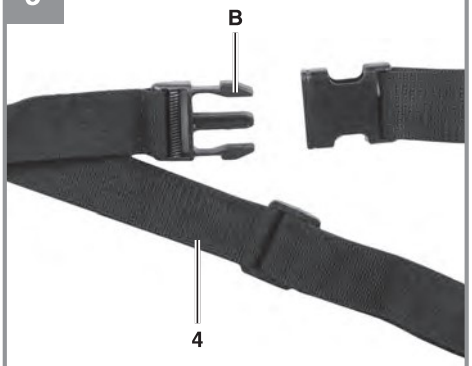

10

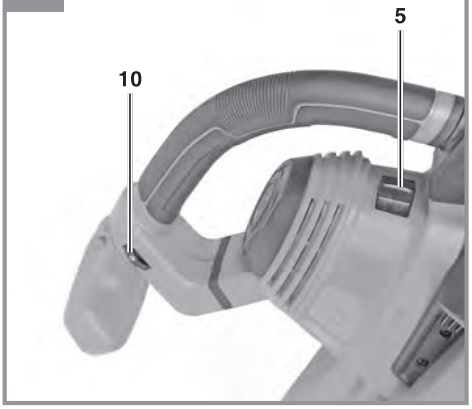

11

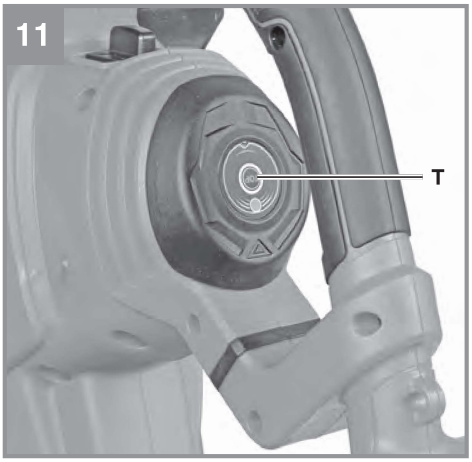

12

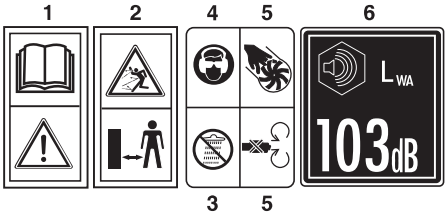

Anl_GE_CL_36_230_Li_E_Solo_SPK9.indb 6 31.08.2021 07:34:44

Danger!
When using the equipment, a few safety precautions must be observed to avoid injuries and damage. Please read the complete operating instructions and safety regulations with due care. Keep this manual in a safe place, so that the information is available at all times. If you give the equipment to any other person, hand over these operating instructions and safety regulations as well. We cannot accept any liability for damage or accidents which arise due to a failure to follow these instructions and the safety instructions.

1. Safety regulations

The corresponding safety information can be found in the enclosed booklet.
Warning!
Read all the safety information, instructions, illustrations and technical data provided on or with this power tool. Failure to adhere to the following instructions may result in electric shock, fire and/or serious injury.
Keep all the safety information and instructions in a safe place for future use.

Explanation of the warning signs on the equipment (see Fig. 12)
1. Read the directions for use before operating the tool.
2. Keep all other persons away from the danger zone.
3. Do not use the tool in rain or snow. Do not expose the tool to wet conditions.
4. Wear goggles and ear muffs.
5. Rotating parts. Keep your hands and feet away from all openings.
6. Guaranteed sound power level

2. Layout and items supplied

2.1 Layout (Fig. 1a/1b/2)
1. Front suction tube
2. Rear suction tube
3. Additional handle
4. Harness
5. On/Off switch
6. Battery mount
7. Catch bag
8. Blower tube
9. Castors
10. Speed controller
11. Screw
12. Star nut

2.2 Items supplied
Please check that the article is complete as specified in the scope of delivery. If parts are missing, please contact our service center or the sales outlet where you made your purchase at the latest within 5 working days after purchasing the product and upon presentation of a valid bill of purchase. Also, refer to the warranty table in the service information at the end of the operating instructions.
- Open the packaging and take out the equipment with care.
- Remove the packaging material and any packaging and/or transportation braces (if available).
- Check to see if all items are supplied.
- Inspect the equipment and accessories for transport damage.
- If possible, please keep the packaging until the end of the guarantee period.

Danger!
The equipment and packaging material are not toys. Do not let children play with plastic bags, foils or small parts. There is a danger of swallowing or suffocating!

- Cordless leaf blower vac
- Original operating instructions
- Safety instructions

3. Proper use

This device is designed to be used for clearing, gathering and picking up dry to slightly damp leaves and grass from paved areas and lawns. Small, light-weight rubbish such as cigarettes, twigs, paper, etc. can be gathered from asphalted garden paths or lawns by blowing into piles.

Warning:
When the equipment is used in vacuum mode, the material will be shredded by an integrated shredder before it is deposited in the catch bag. Therefore this device is not allowed to be used for picking up hard and heavy foreign bodies (e.g. glass, screws, stones). Do not use the device on unpaved, dry surfaces such as loose gravel and dry garden beds. Do not pick up large quantities of dust. This device is not allowed to be used

Anl_GE_CL_36_230_Li_E_Solo_SPK9.indb 19 31.08.2021 07:35:01

for picking up liquids or snow. This device is not allowed to be used indoors. This device is not allowed to be used for distributing or picking up chemicals and poisons such as fertilizers, pesticides, materials containing asbestos or inflammable liquids.

The equipment is to be used only for its prescribed purpose. Any other use is deemed to be a case of misuse. The user / operator and not the manufacturer will be liable for any damage or injuries of any kind caused as a result of this.

Please note that our equipment has not been designed for use in commercial, trade or industrial applications. Our warranty will be voided if the machine is used in commercial, trade or industrial businesses or for equivalent purposes.

4. Technical data

Idling speed n^0 ..... 8000-14000 rpm
Maximum air speed: ..... 230 km/h
Suction power max.: ..... 700 m^3/h
Blowing power max.: ..... 225 m^3/h
Volume of catch bag ..... approx. 45 l
Sound volume level L_{WA} ..... 96.2 dB (A)
Uncertainty K ..... 3 dB (A)
Sound pressure level L_{pA} ..... 80.4 dB (A)
Guaranteed sound power level L_{WA}:..... 103 dB(A)
Vibration a_{hv} ..... 2.604 m/s^2
Uncertainty K ..... 1.5 m/s^2
Weight (blower mode) ..... 3.1 kg
Weight (vacuum mode) ..... 4.4 kg

Important!
The equipment is supplied without batteries and without a charger and is allowed to be used only with the lithium-ion batteries of the Power-X-Change series!

The lithium-ion batteries of the Power-X-Change series are allowed to be charged only with the Power-X charger.

Measured and guaranteed sound power level determined in accordance with 2000/14/EC, extended by 2005/88/EC.

The value given for vibration was determined in accordance with a set of standardized criteria and can be used to compare different products with one another. This value is also suitable to be used for estimating the strain on the user caused by the vibration beforehand.

Caution!
Depending on how you use the device, the actual vibration emissions can vary from the values listed above. Take appropriate measures to protect yourself against vibration stress. Take the entire work sequence into consideration including times at which the device is not working under load or is switched off. Appropriate measures include among other things regular care and maintenance of the device and tool attachments, keeping your hands warm, taking regular breaks and good work sequence planning.

Keep the noise emissions and vibrations to a minimum.
- Only use appliances which are in perfect working order.
- Service and clean the appliance regularly.
- Adapt your working style to suit the appliance.
- Do not overload the appliance.
- Have the appliance serviced whenever necessary.
- Switch the appliance off when it is not in use.
- Wear protective gloves.

Caution!
Residual risks
Even if you use this electric power tool in accordance with instructions, certain residual risks cannot be rules out. The following hazards may arise in connection with the equipment's construction and layout:
1. Lung damage if no suitable protective dust mask is used.
2. Damage to hearing if no suitable ear protection is used.
3. Health damage caused by hand-arm vibrations if the equipment is used over a prolonged period or is not properly guided and maintained.
4. Risk of eye damage if suitable safety goggles are not worn.

This equipment generates an electromagnetic field during operation. Under certain circumstances this field may actively or passively impede medical implants. To reduce the risk of serious or fatal injuries, we recommend persons with medical implants to consult their doctor and the manufacturer of the medical implant prior to using the equipment.

Anl_GE_CL_36_230_Li_E_Solo_SPK9.indb 20 31.08.2021 07:35:02

5. Before using the equipment

The equipment is supplied without batteries and without a charger.

Warning!
Always remove the batteries before making adjustments to the equipment.

5.1 Preparations (Fig. 3a-3f)

5.1.1 Suction tube
Connect the top suction tube (Fig. 3a/Item 2) and the bottom suction tube (Fig. 3a/Item 1) together. Make sure that the guide lug (Fig. 3a/Item A) is inserted into the corresponding recess (Fig. 3a/Item B) when you do this. Make sure that it latches in place correctly as well. Use the suction tube only if it is fully assembled.

Push the guide wheels (Fig. 3b/Item 9) onto the bottom suction tube (Fig. 3b/Item 1), as shown in Fig. 3b, with the lock pressed (Fig. 3b/Item A) and let it snap into place at the desired position. The position can be changed at any time by pressing the lock again. Make sure that it snaps into place correctly.

Fit the additional handle (Fig. 3c/Item 3) to the mount on the top suction tube (Fig. 3c/ Item 2). Using the screw (Fig. 3d/Item 11) and the star nut (Fig. 3e/Item 12), secure the additional handle in the desired position. When fitting the screw, make sure that you insert it from the side with the hexagon lock (Fig. 3d/Item A). The position can be changed at any time by undoing the star nut. Make sure that the parts are fastened securely.

5.1.2 Blower tube
Pull the sleeve (Fig. 3f/Item A) to the top end of the blower tube (Fig. 3f/Item 8) as shown in Fig. 3f. Make sure that it snaps in place correctly on both sides.

5.2 Assembly in blower mode (Fig. 4a/4b)
Insert the blower tube (Fig. 4a/Item 8), which was prepared in 5.1, into the mount (Fig. 4a/Item A) on the motor housing. Make sure that it latches in place correctly.

Attach the harness (Item 4) to the motor housing as shown in Fig. 4b.
The device has now been assembled in blower mode (Fig. 1a). To dismantle, proceed in reverse order. To remove the blower tube, press the button (Fig. 4a/Item B) and pull off the blower tube.

5.3 Assembly in vacuum mode (Fig. 5a-5f)
Undo the star screw (Fig. 5a/Item A) and pull open the cover (Fig. 5a/Item B). Attach the vacuum tube (Fig. 5b/Item 2), which was prepared in 5.1.1, to the motor housing and snap it onto the motor housing as shown in Fig. 5b. Now secure it with the thumb screw (Fig. 5c/Item C).

Attach the harness (Item 4) to the motor housing as shown in Fig. 5d.

Connect the catch bag (Fig. 5e/Item 7) to the mount (Fig. 5e/Item A) on the motor housing. Make sure that it latches in place correctly. Secure the catch bag by the two hooks on the vacuum tube as shown in Fig. 5f.
The device has now been assembled in vacuum mode (Fig. 1b).

To remove the catch bag, press the button (Fig. 5e/Item B) and pull off the catch bag. To dismantle the rest, proceed in reverse order to assembly. Start up the equipment only when fully assembled.

5.4 Safety switch
There are a number of safety switches for preventing the unsafe operation of the equipment. Make sure, therefore, that the following components are correctly fastened, otherwise it will not be possible to switch on the machine.
- In blower mode: Blower tube (Fig. 4a/Item 8) and cover (Fig. 5a/Item B).
- In vacuum mode: Suction tube (Fig. 5c/Item 2) and catch bag (Fig. 5e/Item 7)

5.5 Fitting the battery (Fig. 6a/6b)
Press the pushlock button (Fig. 8/Item C) of the rechargeable battery as shown in Fig. 8 and push the battery into the battery mount provided until it latches in place. Fig. 6b shows the rechargeable batteries when fitted. To remove the battery pack, proceed in reverse order.

Important!
Use only batteries which are charged to the same level. Never combine full and half-full batteries. Always charge the two batteries simultaneously. The equipment‘s operating time depends on the battery with the lower charge level. The two batteries must always be fully charged before use.

Anl_GE_CL_36_230_Li_E_Solo_SPK9.indb 21 31.08.2021 07:35:02

5.6 Charging the battery (Fig. 7-8)

1. Take the battery pack out of the equipment. To do so, press the pushlock button (Fig. 8/ Item C).
2. Check that your mains voltage is the same as that marked on the rating plate of the battery charger. Insert the power plug of the charger into the socket outlet. The green LED will then begin to flash.
3. Insert the battery pack into the charger.
4. In the section entitled „Charger indicator" you will find a table with an explanation of the LED indicator on the charger.

The rechargeable battery can become a little warm during the charging. This is normal.

If the battery pack fails to charge, check:

- whether there is voltage at the socket outlet
- whether there is good contact at the charging contacts

If the battery pack still fails to charge, send

- the charger
- and the battery pack

to our customer service center.

To ensure that items are properly packaged and delivered when you send them to us, please contact our customer service or the point of sale at which the equipment was purchased.

When shipping or disposing of batteries and cordless tools, always ensure that they are packed individually in plastic bags to prevent short circuits and fires.

To ensure that the battery pack provides long service, you should take care to recharge it promptly. You must recharge the battery pack when you notice that the performance of the device drops. Never allow the battery pack to become fully discharged. This will cause it to develop a defect.

Battery capacity indicator (Fig. 8)
Press the button for the battery capacity indicator (Item A). The battery capacity indicator (Item B) shows the charge status of the battery using 3 LEDs.

All 3 LEDs are lit:
The battery is fully charged.

2 or 1 LED(s) are lit:
The battery has an adequate remaining charge.

1 LED flashes:
The battery is empty, recharge the battery.

All LEDs blink:
The battery temperature is too low. Remove the battery from the equipment, keep it at room temperature for one day. If the fault reoccurs, this means that the rechargeable battery has undergone exhaustive discharge and is defective. Remove the battery from the equipment. Never use or charge a defective battery.

6. Operation

Danger!
Start up the equipment only when fully assembled.

6.1 Sizing the strap
Slip the harness over your shoulder and adjust the length of the harness so that you can handle the equipment comfortably.
Caution: Wear the harness in such a way that the snap fastener is always close to hand. In an emergency you can always remove the equipment quickly by opening the snap fastener (Fig. 9 / Item B).

6.2 Switching on the equipment (Fig. 10)

- To switch on, push the On/Off (5) switch to the "I" position
- To switch off, push the On/Off switch to the "0" position

6.3 Mode of operation
Caution! Search the surface for concealed objects (e.g. small animals or hard foreign bodies) before starting to use the equipment.

6.3.1 Blowing foliage
Caution!
If you point the air flow towards other people, animals or objects (e.g. windows), this could cause injuries and damage.

- Point the air flow away from yourself.
- Never point the air flow towards other people, animals or objects.
- Do not blow away any hard objects such as stones or twigs.
- Fit the prepared blower tube and harness (see section 5.2) to the motor housing.
- Check that all the components are correctly fastened (see section 5.4).

Anl_GE_CL_36_230_Li_E_Solo_SPK9.indb 22 31.08.2021 07:35:02

- Position the blower tube just above the ground and adjust the length of the strap to your requirements (see section 6.1).
- Turn on the equipment (see section 6.2).
- Set the desired blowing velocity with the speed controller (see section 6.5).
- Channel the air stream forward and walk slowly to blow foliage or garden refuse into a pile or to clear out hard-to-reach places.
- To increase the blowing velocity for a short time, press the “Turbo button” (see section 6.6).

Danger!
Never gather (blow) hot, combustible or explosive materials into piles.

6.3.2 Sucking up foliage
Caution!
- Only use the leaf blower vac in vacuum mode if the catch bag is undamaged and properly fitted.
- Do not pick up too many leaves in one go as this could clog the tube and the shredder.
- To clear any blockages, follow the steps described in the section “Clearing blockages”.
- Do not pick up hard or damp materials.
- Fit the prepared 2-piece suction tube with rollers and carry-handle, harness and catch bag (see section 5.3) to the motor housing.
- Check that all the components are correctly fastened (see section 5.4).
- Always position the suction tube on the ground and adjust the length of the strap to your requirements (see section 6.1). The guide rollers (Fig. 1/Item 9) at the bottom end of the suction tube will help you to maneuver the suction tube on the ground.
- Turn on the equipment (see section 6.2).
- Set the desired suction power with the speed controller (see section 6.5).
- To increase the suction power for a short time, press the “Turbo button” (see section 6.6).

6.4 Emptying the catch bag (Fig. 1b)
Empty the catch bag (7) in good time. With a nearly full bag, the suction power drops notably. Organic waste should be composted.
- Switch off the equipment and remove the batteries.
- Open the zipper on the catch bag (7) and shake out the material.
- Close the zip on the catch bag (7) again.

6.5 Speed control (Fig. 10)
The equipment is fitted with a variable speed trigger. To use it, turn the speed controller (Item 10) to the desired position. Use the device only with the speed which is actually required and do not let it run at a speed which is faster than necessary.

1 = Minimum speed
MAX = Maximum speed

6.6 Turbo mode (Fig. 11)
If you need higher blowing power or suction power for a short time, you can press the turbo button (Item T). Pressing the turbo button increases the speed for a short time and with it the blowing or suction power.
Important: Never press the turbo button for any longer than necessary, in order to keep the noise level down and extend the battery operating time.

6.7 Clearing blockages
Danger!
- Switch off the equipment, wait for the moving parts to come to a standstill and remove the batteries.
- Wear protective gloves
- Use suitable tools (e.g. a wooden stick)

1. Examine the tube for blockages. Tap the suction tube carefully or use a wooden stick to clear any blockages.
2. Empty the catch bag and remove it. Remove the suction tube.
3. Examine the openings in the motor housing for possible blockages. Remove the blockage with a stick if necessary. Make sure that the shredder is clear.

7. Cleaning, maintenance and ordering spare parts

Hazard!
Always remove the batteries before starting any cleaning work.

7.1 Cleaning
- Keep all safety devices, air vents and the motor housing free of dirt and dust as far as possible. Wipe the equipment with a clean cloth or blow it with compressed air at low pressure.
- We recommend that you clean the device

Anl_GE_CL_36_230_Li_E_Solo_SPK9.indb 23 31.08.2021 07:35:02

immediately each time you have finished using it.
- Clean the equipment regularly with a moist cloth and some soft soap. Do not use cleaning agents or solvents; these could attack the plastic parts of the equipment. Ensure that no water can seep into the device. The ingress of water into an electric tool increases the risk of an electric shock.
- After shaking out the catch bag, turn it inside out and thoroughly clean it in order to prevent mold and unpleasant odors from forming.
- You can use soap and water to clean out a heavily soiled catch bag.
- Rub a bar of dry soap across the zipper teeth if the zipper becomes difficult to pull.
- Clean the vacuum/blower tube with a brush upon evidence of dirt and grime.

7.2 Maintenance
- Should the equipment experience problems beyond those mentioned above, let only an authorized professional or a customer service shop perform an inspection.
- There are no other parts inside the equipment which require maintenance.

7.3 Ordering replacement parts:
Please quote the following data when ordering replacement parts:
- Type of machine
- Article number of the machine
- Identification number of the machine
- Replacement part number of the part required

For our latest prices and information please go to www.Einhell-Service.com

8. Faults

The equipment does not work:
Important!
All connections must be tightly secured.
Check that the battery is charged and whether the charging unit is working. If the equipment will not work in spite of the voltage supply being OK, please send it to the customer service address below.

9. Disposal and recycling

The equipment is supplied in packaging to prevent it from being damaged in transit. The raw materials in this packaging can be reused or recycled. The equipment and its accessories are made of various types of material, such as metal and plastic. Never place defective equipment in your household refuse. The equipment should be taken to a suitable collection center for proper disposal. If you do not know the whereabouts of such a collection point, you should ask in your local council offices.

10. Storage

Store the equipment and accessories in a dark and dry place at above freezing temperature. The ideal storage temperature is between 5 and 30 °C. Store the electric tool in its original packaging.

Anl_GE_CL_36_230_Li_E_Solo_SPK9.indb 24 31.08.2021 07:35:02

11. Charger indicator

Indicator status		Explanations and actions
Red LED	**Green LED**	
Off	Flashing	**Ready for use** The charger is connected to the mains and is ready for use; there is no battery pack in the charger
On	Off	**Charging** The charger is charging the battery pack in quick charge mode. The charging times are shown directly on the charger. Important! The actual charging times may vary slightly from the stated charging times depending on the existing battery charge.
Off	On	**The battery is charged and ready for use.** The unit then changes over to gentle charging mode until the battery is fully charged. To do this, leave the rechargeable battery on the charger for approx. 15 minutes longer. **Action:** Take the battery pack out of the charger. Disconnect the charger from the mains supply.
Flashing	Off	**Adapted charging** The charger is in gentle charging mode. For safety reasons the charging is performed less quickly and takes more time. The reasons can be: - The rechargeable battery has not been used for a very long time. - The battery temperature is outside the ideal range. **Action:** Wait for the charging to be completed; you can still continue to charge the battery pack.
Flashing	Flashing	**Fault** Charging is no longer possible. The battery pack is defective. **Action:** Never charge a defective battery pack. Take the battery pack out of the charger.
On	On	**Temperature fault** The battery pack is too hot (e.g. due to direct sunshine) or too cold (below 0° C). **Action:** Remove the battery pack and keep it at room temperature (approx. 20° C) for one day .

Anl_GE_CL_36_230_Li_E_Solo_SPK9.indb 25 31.08.2021 07:35:02



For EU countries only

Never place any electric power tools in your household refuse.

To comply with European Directive 2012/19/EC concerning old electric and electronic equipment and its implementation in national laws, old electric power tools have to be separated from other waste and disposed of in an environment-friendly fashion, e.g. by taking to a recycling depot.

Recycling alternative to the return request:
As an alternative to returning the equipment to the manufacturer, the owner of the electrical equipment must make sure that the equipment is properly disposed of if he no longer wants to keep the equipment. The old equipment can be returned to a suitable collection point that will dispose of the equipment in accordance with the national recycling and waste disposal regulations. This does not apply to any accessories or aids without electrical components supplied with the old equipment.

The reprinting or reproduction by any other means, in whole or in part, of documentation and papers accompanying products is permitted only with the express consent of the Einhell Germany AG.

Subject to technical changes

Anl_GE_CL_36_230_Li_E_Solo_SPK9.indb 26 31.08.2021 07:35:03

Service information

We have competent service partners in all countries named on the guarantee certificate whose contact details can also be found on the guarantee certificate. These partners will help you with all service requests such as repairs, spare and wearing part orders or the purchase of consumables.

Please note that the following parts of this product are subject to normal or natural wear and that the following parts are therefore also required for use as consumables.

Category	Example
Wear parts*	Battery
Consumables*	
Missing parts	

* Not necessarily included in the scope of delivery!

In the effect of defects or faults, please register the problem on the internet at www.Einhell-Service.com. Please ensure that you provide a precise description of the problem and answer the following questions in all cases:

- Did the equipment work at all or was it defective from the beginning?
- Did you notice anything (symptom or defect) prior to the failure?
- What malfunction does the equipment have in your opinion (main symptom)? Describe this malfunction.

Anl_GE_CL_36_230_Li_E_Solo_SPK9.indb 27 31.08.2021 07:35:03

Warranty certificate

Dear Customer,
All of our products undergo strict quality checks to ensure that they reach you in perfect condition. In the unlikely event that your device develops a fault, please contact our service department at the address shown on this guarantee card. You can also contact us by telephone using the service number shown. Please note the following terms under which guarantee claims can be made:

1. These guarantee terms apply to consumers only, i.e. natural persons intending to use this product neither for their commercial activities nor for any other self-employed activities. These warranty terms regulate additional warranty services, which the manufacturer mentioned below promises to buyers of its new products in addition to their statutory rights of guarantee. Your statutory guarantee claims are not affected by this guarantee. Our guarantee is free of charge to you.
2. The warranty services cover only defects due to material or manufacturing faults on a product which you have bought from the manufacturer mentioned below and are limited to either the rectification of said defects on the product or the replacement of the product, whichever we prefer.
   Please note that our devices are not designed for use in commercial, trade or professional applications. A guarantee contract will not be created if the device has been used by commercial, trade or industrial business or has been exposed to similar stresses during the guarantee period.
3. The following are not covered by our guarantee:
   - Damage to the device caused by a failure to follow the assembly instructions or due to incorrect installation, a failure to follow the operating instructions (for example connecting it to an incorrect mains voltage or current type) or a failure to follow the maintenance and safety instructions or by exposing the device to abnormal environmental conditions or by lack of care and maintenance.
   - Damage to the device caused by abuse or incorrect use (for example overloading the device or the use or unapproved tools or accessories), ingress of foreign bodies into the device (such as sand, stones or dust, transport damage), the use of force or damage caused by external forces (for example by dropping it).
   - Damage to the device or parts of the device caused by normal or natural wear or tear or by normal use of the device.
4. The guarantee is valid for a period of 24 months starting from the purchase date of the device. Guarantee claims should be submitted before the end of the guarantee period within two weeks of the defect being noticed. No guarantee claims will be accepted after the end of the guarantee period. The original guarantee period remains applicable to the device even if repairs are carried out or parts are replaced. In such cases, the work performed or parts fitted will not result in an extension of the guarantee period, and no new guarantee will become active for the work performed or parts fitted. This also applies if an on-site service is used.
5. To make a claim under the guarantee, please register the defective device at:
   www.Einhell-Service.com. Please keep your bill of purchase or other proof of purchase for the new device. Devices that are returned without proof of purchase or without a rating plate shall not be covered by the guarantee, because appropriate identification will not be possible. If the defect is covered by our guarantee, then the item in question will either be repaired immediately and returned to you or we will send you a new replacement.

Of course, we are also happy offer a chargeable repair service for any defects which are not covered by the scope of this guarantee or for units which are no longer covered. To take advantage of this service, please send the device to our service address.

Also refer to the restrictions of this warranty concerning wear parts, consumables and missing parts as set out in the service information in these operating instructions.

Anl_GE_CL_36_230_Li_E_Solo_SPK9.indb 28 31.08.2021 07:35:03

CE EU

D Konformitätserklärung: Wir erklären Konformität gemäß EU-Richtlinie und Normen für Artikel
GB Declaration of conformity: We declare conformity in accordance with the EU directive and standards for article
F Déclaration de conformité : Nous déclarons la conformité conformément aux directives et normes UE pour l'article
I Dichiarazione di conformità: dichiariamo la conformità secondo la direttiva UE e le norme per l'articolo
DK Overensstemmelseserklæring: Vi attesterer overensstemmelse iht. EU-direktiv samt standarder for artikel
S Försäkran om överensstämmelse: Vi förklarar följande överensstämmelse enl. EU-direktiv och standarder för artikeln
CZ Prohlášení o shodě: Prohlašujeme shodu podle směrnice EU a norem pro výrobek
SK Vyhlásenie o zhode: Vyhlasujeme zhodu podľa smernice EÚ a noriem pre výrobok
NL Conformiteitsverklaring: wij verklaren conformiteit conform EU-richtlijn en normen voor artikel
E Declaración de conformidad: declaramos la conformidad a tenor de la directiva y normas de la UE para el artículo
FIN Standardinmukaisuustodistus: Me vakuutamme, että EU-direktiivin ja standardien vaatimukset täyttyvät tuotteelle
SLO IZJAVA O SKLADNOSTI potrjuje sledečo skladnost s smernico EU in standardi za izdelek
H Konformitási nyilatkozat: Az EU-irányvonal és normák szerinti konformitást jelentjük ki a cikkekhez
RO Declarație de conformitate: Declarăm conformitate conform directivei şi normelor UE pentru articolul
GR Δήλωση συμμόρφωσης: Δηλώνουμε συμμόρφωση σύμφωνα με Οδηγία Ες και πρότυπα για τα προϊόντα
P Declaração de conformidade: Declaramos a conformidade de acordo com a diretiva CE e normas para o artigo
HR IZJAVA O SUKLADNOSTI potvrđuje sljedeću usklađenost prema smjernicama EU i normama za artikl
BIH IZJAVA O SUKLADNOSTI potvrđuje sljedeću usklađenost prema smjernicama EU i normamaza artikl
RS DEKLARACIJA O USUGLAŠENOST potvrđuje sledeću usklađenost prema smernicama EZ i normama za artikal
TR Uygunluk Deklarasyonu: AB direktifi ve ürün standartları uyarınca uygunluğunu beyan ederiz
RUS Заявление о соответствии товара: Настоящим удостоверяется, что следующие продукты соответствуют директивам и нормам ЕС
EE Vastavusdeklaratsioon: Tõendame toote vastavust EL direktiivile ja standarditele
LV Atbilstības deklarācija: Mēs apliecinām atbilstību ES direktīvai un standartiem tālāk minētajām precēm
LT Atitikties deklaracija: deklaruojame, kad gaminys atitinka ES direktyvą ir standartus
PL Deklaracja Zgodności - deklarujemy zgodność wymienionego poniżej artykułu z następującymi normami na podstawie dyrektywy EU
BG Декларация за съответствие: Ние декларираме съответствие на Директивите и нормите (ЕС) за изделия
UKR Декларація відповідності: ми заявляємо про відповідність згідно з Директивою ЄС та стандартами стосовно артикула
MK Изјава за сообразност: Изјавуваме сообразност со регулативата и со нормите на ЕУ за артикли
N Samsvarserklæring: Vi erklærer samsvar i henhold til EU-direktiv og standarder for artikkel
IS Samræmisyfirlýsing: Við útskurðum samræmi við EU-reglugerð og stöðlum fyrir vörutegund

Akku-Laubsauger* GE-CL 36/230 Li E (Einhell)

- ☐ **2014/29/EU**
- ☐ **2005/32/EC_2009/125/EC**
  - ☐ **(EU)2015/1188**
- ☐ **2014/35/EU**
- ☐ **2006/28/EC**
- ☒ **2014/30/EU**
- ☐ **2014/32/EU**
- ☐ **2014/53/EU**
- ☐ **2014/68/EU**
- ☐ **(EU)2016/426**
  Notified Body:
- ☐ **(EU)2016/425**
- ☒ **2011/65/EU_(EU)2015/863**
- ☒ **2006/42/EC**
  - ☐ **Annex IV**
    Notified Body:
    Reg. No.:
- ☒ **2000/14/EC_2005/88/EC**
  - ☒ **Annex V**
  - ☐ **Annex VI**
    Noise: measured L_{WA} = 96,2 dB (A); guaranteed L_{WA} = 103 dB (A)
    P = kW; L/Ø = cm
    Notified Body:
- ☐ **2012/46/EU_(EU)2016/1628**
  Emission No.:

Standard references: EN 60335-1; EN 50636-2-100; EN 62233; EN 55014-1; EN 55014-2

ISC GmbH · Eschenstraße 6 · D-94405 Landau/Isar

Landau/Isar, den 16.08.2021

Andreas Weichselgartner/General-Manager

Jeffrey Liu/Product-Management

First CE: 2019
Art.-No.: 34.336.30 I.-No.: 21021
Subject to change without notice

Archive-File/Record: NAPR026376
Documents registrar: Laubmeier Daniel
Wiesenweg 22, D-94405 Landau/Isar

* *GB* Cordless blower vac · *F* Aspirateur de feuilles sans fil · *I* Aspiratore di foglie a batteria · *DK/N* Akku-løvsuger · *S* Batteridriven lövsug · *CZ* Akumulátorový sběrač listí · *SK* Akumulátorový vysávač listia · *NL* Accu-bladzuiger · *E* Aspirador de hojas con bateria · *FIN* Akkukäyttöinen lehti-imuri · *SLO* Sesalnik za listje na baterije · *H* Akkus-lombszívó · *RO* Aspirator de frunze cu acumulator · *GR* Ναρροφητης φυλλων, με μπαταρια · *P* Aspirador de folhas sem fio · *HR/BIH* Akumulatorski usisavač lišća · *RS* Akumulatorski usisavač lišća · *PL* Akumulatorowy odkurzacz do liści · *TR* Akülü yaprak aspiratörü · *RUS* Пылесос для листвы на аккумуляторе · *EE* Akumootoriga leheimur · *LV* Akumulatora lapu sūcējs · *LT* Akumuliatorinis lapų siurblys · *BG* Електрическа машина за засмукване на листа · *UKR* Садовий акумуляторний пилосос · *MK* Издувувач на лисја на батерии · *NO* Batteridrevet løvsuger · *IS* Hleðslu-Laufsuga

Anl_GE_CL_36_230_Li_E_Solo_SPK9.indb 144 31.08.2021 07:35:17

UK CA Declaration of conformity

We, Einhell UK Ltd

Champions Business Park, First Floor Unit 10, Arrowe Brook Rd, Upton, Wirral CH49 0AB, United Kingdom

declare the conformity to UK standards and legislation was assessed for:

Cordless Leaf Vacuum GE-CL 36/230 Li E (Einhell)

UK legislation

- ☐ **Simple Pressure Vessels (Safety) Regulation**
- ☐ **Electrical Equipment (Safety) Regulation**
- ☐ **Radio Equipment Regulation**
- ☐ **Personal Protective Equipment Regulation**
- ☐ **The Ecodesign for Energy-Related Products and Energy Information Regulation**
- ☒ **The Restriction of the Use of Certain Hazardous Substances in Electrical and Electronic Equipment Regulation**
- ☒ **Noise Emission in the Environment by Equipment for use Outdoors Regulation**
  Noise: measured L_{WA} = 96,2 dB (A); guaranteed L_{WA} = 103 dB (A)
- ☒ **Supply of Machinery (Safety) Regulation**
  - ☐ **Annex IV**
    Notified Body:
    Reg. No.:
- ☒ **Electromagnetic Compatibility Regulation**
- ☐ **Measuring Instruments Regulation**
- ☐ **Pressure Equipment (Safety) Regulation**

Standards: BS 60335-1; BS 50636-2-100; BS 62233; BS 55014-1; BS 55014-2

Wirral, 2021.08.16

Tom Chambers, Managing Director Einhell UK Ltd.

Article Number: 34.336.30 **I.-No.:** 21021
Subject to change without notice

Archive-File/Record: NAPR026376
Documents registrar: Laubmeier Daniel
Wiesenweg 22, 94405 Landau/Isar, Germany

Anl_GE_CL_36_230_Li_E_Solo_SPK9.indb 145 31.08.2021 07:35:17