PICOBELLA

D **Originalbetriebsanleitung**
Akku-Oberflächenbürste

GB **Original operating instructions**
Cordless surface brush

F **Instructions d'origine**
Brosse de surface sans fil

I **Istruzioni per l'uso originali**
Spazzola per superfici a batteria

DK/N **Original betjeningsvejledning**
Akku-overfladebørste

S **Original-bruksanvisning**
Batteridriven ytborste

CZ **Originální návod k obsluze**
Akumulátorový kartáč na čištění povrchů

SK **Originálny návod na obsluhu**
Akumulátorová kefa na čistenie povrchov

NL **Originele handleiding**
Accu oppervlakteborstel

E **Manual de instrucciones original**
Cepillo para superficies inalámbrico

FIN **Alkuperäiskäyttöohje**
Akku-pintaharja

SLO **Originalna navodila za uporabo**
Akumulatorska površinska ščetka

H **Eredeti használati utasítás**
Akkus-felülettisztító kefe

9

Art.-Nr.: 34.242.00 **I.-Nr.: 21021**

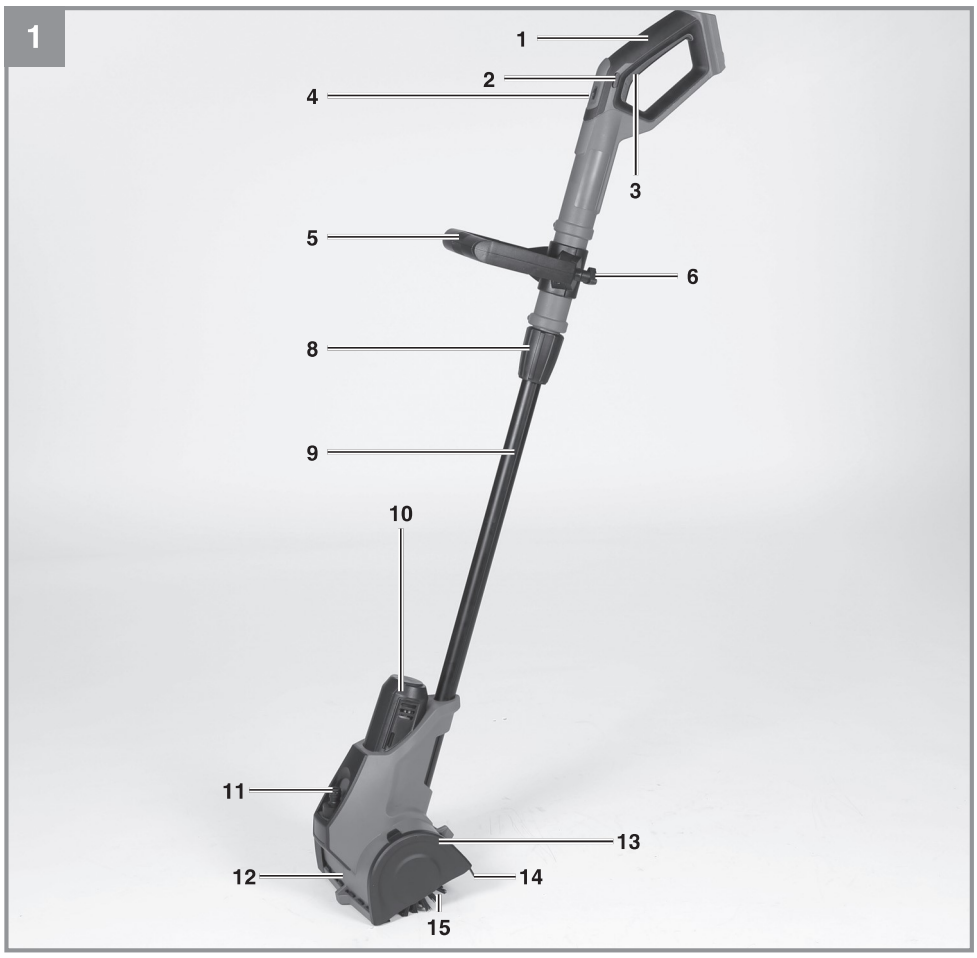

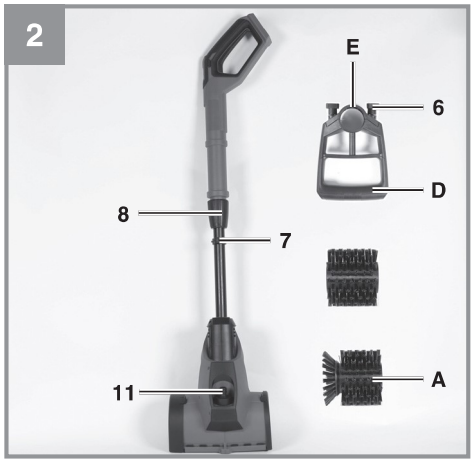



Anl_Picobella_SPK9.indb 2 30.09.2021 14:24:20



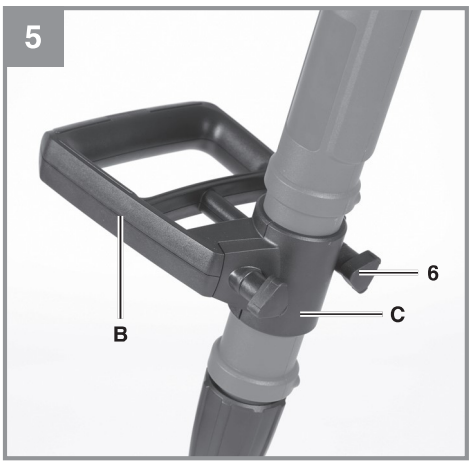

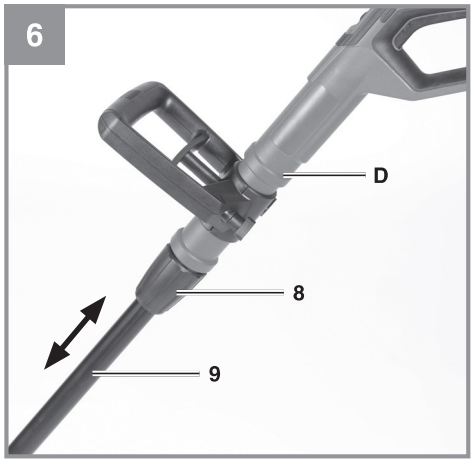

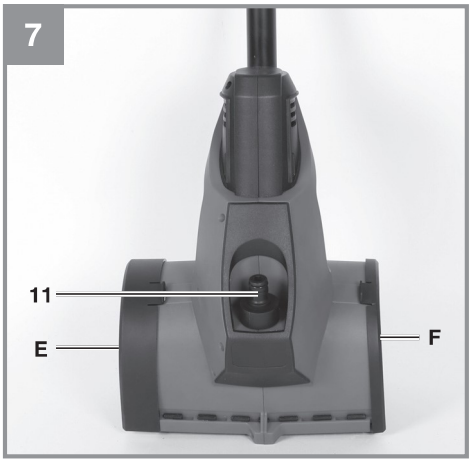

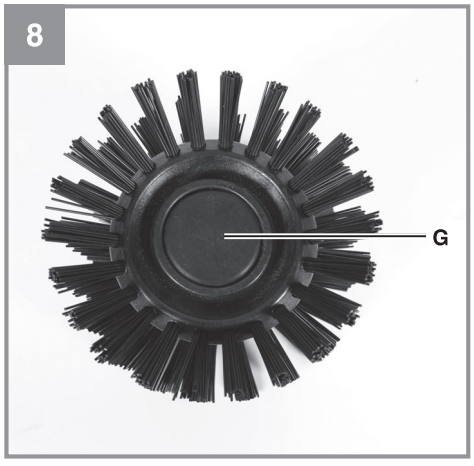

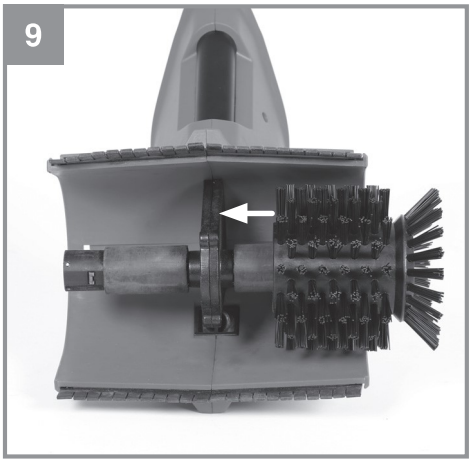

Anl_Picobella_SPK9.indb 3 30.09.2021 14:24:24

10

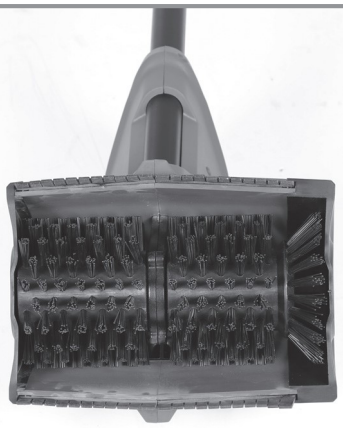

10a

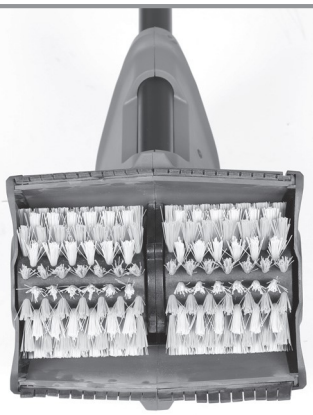

10b



11

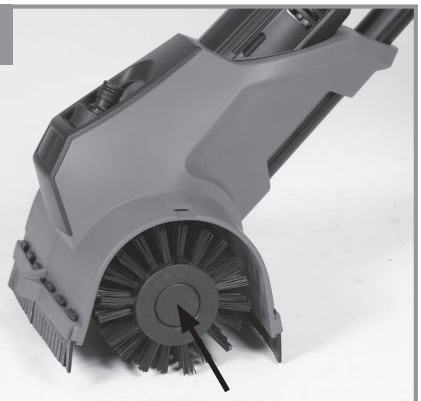

12



13



Anl_Picobella_SPK9.indb 4 30.09.2021 14:24:29

14a



14b



15

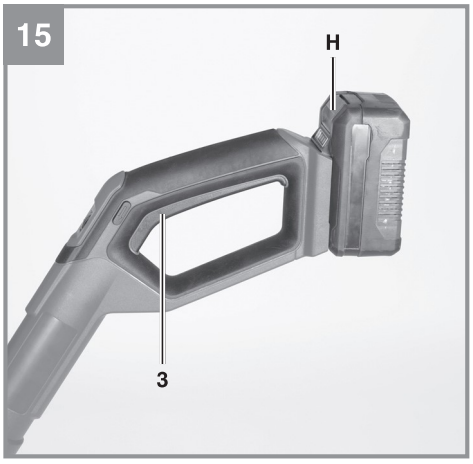

16



17

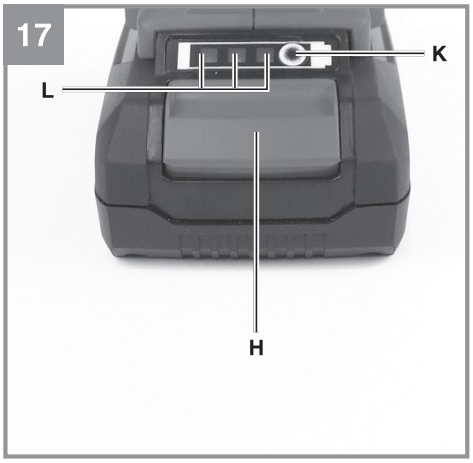

18

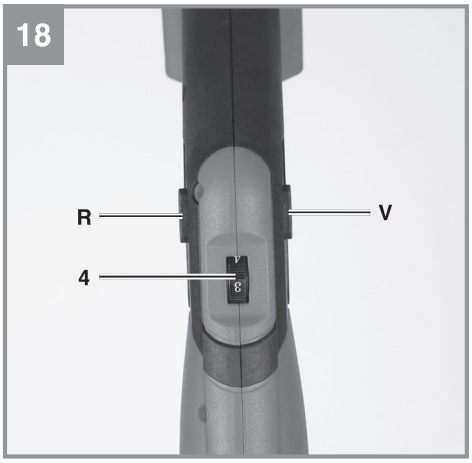

Anl_Picobella_SPK9.indb 5 30.09.2021 14:24:34

19

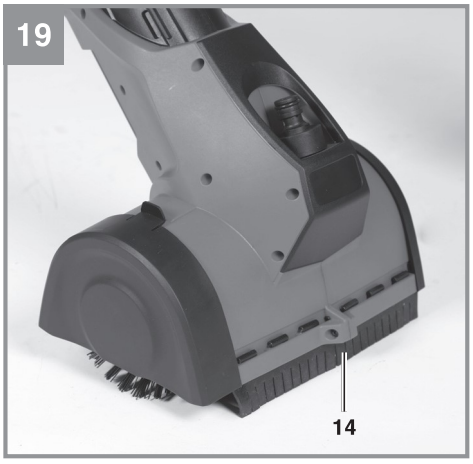

20

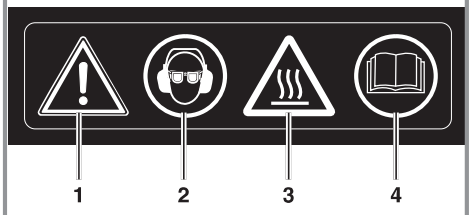

Anl_Picobella_SPK9.indb 6 30.09.2021 14:24:38



Danger! - Read the operating instructions to reduce the risk of injury.

This equipment is not allowed to be used by children. Children should be supervised so that they do not play with the equipment. Children are not allowed to carry out the cleaning or maintenance. This equipment is not allowed to be used by people with limited physical, sensory or mental capacities or by those with insufficient knowledge or experience unless they are supervised or instructed by a person who is responsible for them.

Anl_Picobella_SPK9.indb 20 30.09.2021 14:24:55

Danger!
When using the equipment, a few safety precautions must be observed to avoid injuries and damage. Please read the complete operating instructions and safety regulations with due care. Keep this manual in a safe place, so that the information is available at all times. If you give the equipment to any other person, hand over these operating instructions and safety regulations as well. We cannot accept any liability for damage or accidents which arise due to a failure to follow these instructions and the safety instructions.

1. Safety regulations

The corresponding safety information can be found in the enclosed booklet.
Warning!
Read all the safety information, instructions, illustrations and technical data provided on or with this power tool. Failure to adhere to the following instructions may result in electric shock, fire and/or serious injury.
Keep all the safety information and instructions in a safe place for future use.

Explanation of the warning signs on the equipment (see Fig. 20)
1: Warning!
2: Wear goggles and ear muffs!
3: Caution: Hot equipment parts.
4: Read the instruction manual before starting!

2. Layout and items supplied

2.1 Layout (Fig. 1/2)
1 Handle
2 Changeover switch
3 On/Off switch
4 Speed controller
5 Additional handle
6 Fastening screws
7 Hose clip
8 Lock nut
9 Long handle
10 Motor housing
11 Water inlet connector
12 Brush housing
13 Brush cover on side
14 Splash guard
15 Nylon brush

2.2 Items supplied
Please check that the article is complete as specified in the scope of delivery. If parts are missing, please contact our service center or the sales outlet where you made your purchase at the latest within 5 working days after purchasing the product and upon presentation of a valid bill of purchase. Also, refer to the warranty table in the service information at the end of the operating instructions.
- Open the packaging and take out the equipment with care.
- Remove the packaging material and any packaging and/or transportation braces (if available).
- Check to see if all items are supplied.
- Inspect the equipment and accessories for transport damage.
- If possible, please keep the packaging until the end of the guarantee period.

Danger!
The equipment and packaging material are not toys. Do not let children play with plastic bags, foils or small parts. There is a danger of swallowing or suffocating!

- Cordless surface brush with hose clip
- Complete additional handle
- MEDIUM 2-piece nylon brush (nylon brush + nylon brush with side brush (A))
- Original operating instructions
- Safety information

3. Proper use

The equipment is designed for cleaning work on surfaces in private outdoor areas only. The surfaces must be suitable for cleaning using rotating brushes. For wet cleaning (recommended) the surfaces must also be insensitive to water.

Sensitive, polished, coated and scratch-sensitive surfaces can become roughened and/or get damaged. This equipment must not be used to clean such surfaces. The equipment may only be used by guiding it over the ground in a vertical position. The equipment must not be used in a horizontal position (e.g. walls) or overhead (e.g. ceiling). It must not be used for unmade/unpaved surfaces (e.g. grass pavers).

Anl_Picobella_SPK9.indb 21 30.09.2021 14:24:55

Use only the brush which is intended to be used for the surface you want to clean. Test the brush for suitability on an inconspicuous area first before using it each time. Different brushes for different surfaces are available as separate accessories. Only use water without any additives whatsoever.

The **MEDIUM** nylon brush (black) is specifically suitable for cleaning unsealed paver and stone surfaces. It can therefore also be used for cleaning surfaces which are paved with paving stones/concrete blocks or concreted surfaces (e.g. driveways, decks, paths). The side brush can be used for cleaning perimeters and bases.

Using the **SOFT** nylon brush (yellow/green) the equipment can also be used for cleaning wood, composite materials (BPC/WPC) or for brushing (e.g. flattened areas) artificial turf to raise it upright, as used in the private domain where it is installed, for example, on balconies or decks.

The **ULTRA** metal brush can be used for cleaning robust surfaces such as, e.g. paving stones/ concrete blocks, concreted surfaces, granite or porphyry to remove stubborn dirt.

The equipment is to be used only for its prescribed purpose. Any other use is deemed to be a case of misuse. The user / operator and not the manufacturer will be liable for any damage or injuries of any kind caused as a result of this.

Please note that our equipment has not been designed for use in commercial, trade or industrial applications. Our warranty will be voided if the machine is used in commercial, trade or industrial businesses or for equivalent purposes.

Caution!
Residual risks
Even if you use this electric power tool in accordance with instructions, certain residual risks cannot be rules out. The following hazards may arise in connection with the equipment's construction and layout:

1. Lung damage if no suitable protective dust mask is used.
2. Damage to hearing if no suitable ear protection is used.
3. Health damage caused by hand-arm vibrations if the equipment is used over a prolonged period or is not properly guided and maintained.
4. Injury and damage to property caused by flying parts.

Limit the operating time.
All stages of the operating cycle must be considered (for example, times in which the electric tools are switched off and times in which the tool is switched on but operates without load).

Danger!
This electric power tool generates an electromagnetic field during operation. Under certain circumstances this field may actively or passively impede medical implants. To reduce the risk of serious or fatal injuries, we recommend persons with medical implants to consult their doctor and the manufacturer of the medical implant prior to using the equipment.

4. Technical data

Voltage.....18 V d.c.
Speed n0 ..... 800-1400 rpm
Brush diameter ..... 115 mm
Protection class III
Sound power level LWA ..... 94.6 dB (A)
Uncertainty K ..... 3 dB (A)
Vibration ah ..... 2,13 m/s^2
Uncertainty K .....1.5 m/s^2
Weight ..... 4,1 kg
Sound pressure level LpA at the operator's ear ...
..... 83,8 dB (A)
Uncertainty K ..... 3 dB (A)
Max. water inlet pressure .....0.6 MPa (6 bar)

Important!
The equipment is supplied without batteries and without a charger and is allowed to be used only with the lithium-ion batteries of the Power-X-Change series!

The lithium-ion batteries of the Power-X-Change series are allowed to be charged only with the Power-X charger.

The machine noise might exceed 85 dB (A). The operator will require noise protection measures if this is the case.

Important!
The vibration value changes according to the area of application of the electric equipment and

Anl_Picobella_SPK9.indb 22 30.09.2021 14:24:55

may exceed the specified value in exceptional circumstances.

Keep the noise emissions and vibrations to a minimum.
- Only use appliances which are in perfect working order.
- Service and clean the appliance regularly.
- Adapt your working style to suit the appliance.
- Do not overload the appliance.
- Have the appliance serviced whenever necessary.
- Switch the appliance off when it is not in use.
- Wear protective gloves.

5. Before starting the equipment

The equipment is supplied without batteries and without a charger.

5.1 Turn the steady grip out of the transport position (Fig. 3-4)
Important! For transport reasons the steady grip is turned 90° to the side. For you to be able to work with the equipment, the steady grip must be aligned in line with the brush housing (working position).
1. Slacken the lock nut (8) by turning it counterclockwise and turn the steady grip as far as it will go.
2. Secure the lock nut (8) by turning it clockwise.

5.2 Fitting the additional handle (Fig. 5)
Using the handle screws (6), fasten the additional handle (B) (the screws are accessible from below) and the holder (C) at the area provided.

5.3 Adjusting the length of the long handle (Fig. 6)
To ensure that you have a comfortable working position, the length of the long handle can be adjusted.
1. Slacken the lock nut (8) by turning it counterclockwise.
2. To change the length of the long handle, pull the long handle (9) out of the steady grip (D) or push it into the steady grip.
3. Make sure that the steady grip is in the working position (section 5.1) and secure the lock nut (8) by turning it clockwise.

5.4 Adjusting the additional handle (Fig. 5)
Undo the two fastening screws (6) on the additional handle until it can be moved in any direction without any great resistance. Set the required position and tighten the two fastening screws (6) again.

5.5 Fitting the cleaning brushes (Fig. 7-10)
Remove the brush covers on the sides (Fig. 7 / Item E, F). The product is supplied complete with a 2-piece **MEDIUM** nylon brush (black). A nylon brush (Fig. 2 / Item A) is equipped with a side brush. The cleaning brushes have rubber caps (Fig. 8 / Item G) on the outside. Slot the nylon brush with side brush onto the brush mount (Fig. 9) on either the left or right side according to your requirements and the other nylon brush onto the other brush mount. Fit the brush covers back in place. The wide brush cover (Fig. 7 / Item E) is for the nylon brush with side brush. The MEDIUM nylon brush is ready-fitted (Fig. 10).

The **SOFT** nylon brush (yellow/green) (Fig. 10a) and the **ULTRA** metal brush (Fig. 10b) must be fitted in the same way, but do not have a side brush. They come supplied complete with a narrow brush cover which must be used instead of the wide brush cover.
Warning! There is a risk of injury from the bristles of the metal brush – wear safety gloves.

5.6 Removing cleaning brushes
Remove the brush covers on the sides (Fig. 7 / Item E, F). Press the middle of the rubber cap (Fig. 11 / Item G) to actuate the release button underneath and pull off the brush at the same time.
Warning! There is a risk of injury from the bristles of the metal brush – wear safety gloves.

5.7 Water inlet connector (Fig. 12 – 14b)
To achieve top cleaning results quickly, we recommend wet cleaning.

Important!
- Observe the requirements of EN 1717 in relation to the connection of the water connection to the drinking water network. Consult a specialist plumbing company.
- Never direct the water jet at electric cables or the equipment itself.
- The water temperature must be between +5°C and +35°C.
- Do not use water that is dirty, gritty or contains any chemical products, as these could impair operation and shorten the life of the equipment.

Anl_Picobella_SPK9.indb 23 30.09.2021 14:24:55

The connection to the water inlet must be fitted with a connector for standard hose coupling systems (Fig. 7 / Item 11). Pass a water hose (approx. Ø 13 mm (½“)), through the additional handle as shown in Fig. 12 and attach the hose coupling to the connection for the water inlet (Fig. 13). Remove the hose clip (Fig. 2 / Item 7) from the long handle and secure the hose to the long handle with the hose clip (Fig. 14a/14b).

Each time before use, check the following:
- That the equipment is in perfect condition and that the safety devices and the cleaning brush are complete.
- That all screws are securely fastened.
- That all moving parts move smoothly.

5.8 Fitting the battery (Fig. 15)
Push the battery into the battery mount provided. The battery will be heard to click into place when it has been pushed fully in. To take out the battery, press the pushlock button (Item H) and remove the battery.

5.9 Charging the battery (Fig. 16)
1. Take the battery pack out of the equipment. Do this by pressing the pushlock button.
2. Check that your mains voltage is the same as that marked on the rating plate of the battery charger. Insert the power plug of the charger into the socket outlet. The green LED will then begin to flash.
3. Insert the battery pack into the charger.
4. In the section entitled „Charger indicator“ you will find a table with an explanation of the LED indicator on the charger.

The battery pack can become a little warm during the charging. This is normal.
If the battery pack fails to charge, check:
- whether there is voltage at the socket outlet
- whether there is good contact at the charging contacts

If the battery pack still fails to charge, send
- the charger
- and the battery pack

to our customer service center.

To ensure that items are properly packaged and delivered when you send them to us, please contact our customer service or the point of sale at which the equipment was purchased.

When shipping or disposing of batteries and cordless tools, always ensure that they are packed individually in plastic bags to prevent short circuits and fires.

To ensure that the battery pack provides long service, you should take care to recharge it promptly. You must recharge the battery pack when you notice that the performance of the device drops. Never allow the battery pack to become fully discharged. This will cause it to develop a defect.

5.10 Battery charge level indicator (Fig. 17)
Press the button for the battery charge level indicator (Item K). The battery charge level indicator (Item L) shows the charge status of the battery using 3 LEDs.

All 3 LEDs are lit:
The battery is fully charged.

2 or 1 LED(s) are lit:
The battery has an adequate remaining charge.

1 LED blinks:
The battery is empty, recharge the battery.

All LEDs blink:
The battery temperature is too low. Remove the battery from the equipment, keep it at room temperature for one day. If the fault reoccurs, this means that the rechargeable battery has undergone exhaustive discharge and is defective. Remove the battery from the equipment. Never use or charge a defective battery.

6. Operation

Please note that the statutory regulations governing noise abatement may differ from one location to another.

Danger! The brush covers on the side must be fitted when carrying out work.

Warning!
- Make sure that you have fitted the brush which is intended to be used for the surface you want to clean.
- Make sure that the brush covers on the side are fitted securely.
- Inspect the brushes to check them for dirt before you start your cleaning work and clean

Anl_Picobella_SPK9.indb 24 30.09.2021 14:24:56

them if necessary.
- Carry out a test run on a small area which is not very visible to check that brushing does not damage the surface.
- The surface to be cleaned must be free of objects such as stones, twigs, etc. These could be flung up by the rotating brush or scratch the surface.
- Lift the equipment 1-2 centimeters off the ground when you switch it on, but only until it has reached full speed. Take care when doing so in order to prevent injuries.
- Never switch on the equipment while it is tilted or while it is lifted for any other purpose than for reaching the full speed – risk of injury!
- Never use the equipment for too long at any one point.
- We recommend wet cleaning. Only use clean water without any additives whatsoever.
- Keep your hands and feet away from the rotating brush.
- Only insert the battery just before you start your work and remove it again when you have finished.

6.1 Changeover switch (Fig. 18)
Note:
- Using the changeover switch you can select the direction of rotation of the equipment and lock it so that it cannot be switched on accidentally. You can select between forward and reverse rotation. Forward is the standard direction of rotation, with which the equipment has the most power.
- Hold the equipment firmly by the handle and additional handle and make sure you have a steady standing position.
- To avoid causing damage to the equipment, the direction of rotation must only be changed when the equipment is at a standstill.

a) Forward (standard direction of rotation): Slide switch on left (V) pressed - the equipment pulls away from you.
b) Safety- lock-off: Slide switch in the middle position (as shown) - On/Off switch blocked
c) Reverse: Slide switch on right (R) pressed - the equipment moves towards you.

6.2 On/Off switch (Fig. 15 / Item 3)
a) **Switching on**
When you press the On/Off switch, the brush rotates.
b) **Switching off**
When you release the On/Off switch, the equipment switches off and the brush comes to a standstill.

6.3 Speed controller (Fig. 18 / Item 4)
To set the speed of the brush, turn the speed controller (min = lowest / max = highest). This allows the speed to be adjusted to the particular surface being cleaned. The numbers 1 – 5 marked on the speed controller are provided to indicate the set speed more clearly.

6.4 Operation
Note: Worn or frayed brushes should be replaced in good time. Replace the brush as soon as its diameter is less than approx. 95 mm. A brush diameter of any less can lead to damage.

Important! If the permissible input current is exceeded (e.g. by pressing too strongly), the equipment switches off automatically and must be switched on again by pressing the On/Off switch.

6.4.1 Cleaning in general (not applicable to section “6.4.5 Brushing artificial turf”)
1. Place the brush evenly on the surface.
2. Set the working height to the one which is most comfortable for you (see section 5.3). The splash guard (Fig. 1 / Item 14) must just clear the ground on both sides.
3. Select the correct direction of rotation (see section 6.1) for the surface you want to clean (observe sections 6.4.2 – 6.4.4).
4. To achieve top cleaning results quickly, we recommend wet cleaning. Open the water inlet.
5. Lift the equipment 1-2 centimeters and switch on the equipment (see section 6.2).
6. Set the desired speed (from slow to fast) (see section 6.3). Wait until the full speed has been reached and then place the brush on the surface to be cleaned.
7. Guide the brush slowly and in lines, similar to a broom, over the surface. Only apply a small amount of pressure at first and then increase it little by little.

6.4.2 Cleaning wood, composite materials (BPC/WPC)
Warning! Use only the SOFT brush to do this (to fit the brush, see section 5.5). All other available brushes are made of hard material and can damage the surface.
- Always clean the boards or wooden elements in a longitudinal direction (along the grain).
- Actuate the left side (Fig. 18 / Item V) of the changeover switch (forward). The equipment will pull away from you (standard direction of

Anl_Picobella_SPK9.indb 25 30.09.2021 14:24:56

rotation).
- It is recommended that you clean on a board-by-board basis.
- Afterwards, rinse the cleaned surface down with water.

6.4.3 Cleaning smooth, unsealed paver and stone surfaces

Note: Use the **MEDIUM** brush to do this (to fit the brush, see section 5.5).
- Actuate the left side (Fig. 18 / Item V) of the changeover switch (forward). The equipment will pull away from you (standard direction of rotation).
- In case of certain kinds of stubborn dirt, it can be helpful to clean using both directions of rotation. Please note that when the equipment is in reverse (changeover switch pressed on the right, Fig. 18 / Item R), it has less power.
- To clean perimeters and bases, remove the wide side cover and clean them using the side brush.
- Afterwards, rinse the cleaned surface down with water.

6.4.4 Rough, unsealed paving stones, concrete blocks and concreted surfaces

Note: Use only the **ULTRA** brush to do this (to fit the brush, see section 5.5).
Warning! There is a risk of injury from the bristles of the metal brush – wear safety gloves.

- Actuate the left side (Fig. 18 / Item V) of the changeover switch (forward). The equipment will pull away from you (standard direction of rotation).
- In case of certain kinds of stubborn dirt, it can be helpful to clean using both directions of rotation. Please note that when the equipment is in reverse (changeover switch pressed on the right (Fig. 18 / Item R)), it has less power. Afterwards, rinse the cleaned surface down with water.

6.4.5 Brushing artificial turf

Warning!
- Use only the **SOFT** brush to do this (yellow/green). All other available brushes can damage the artificial turf.
- Do not use water - dry-brush only.
- Brush in a forward direction only (Fig. 18 / Item V, standard direction of rotation - left side of the changeover switch actuated).
- Remove all leaves, rubbish and similar before starting brushing.

1. Place the SOFT brush evenly on the surface.
2. Set the working height to the one which is most comfortable for you (see section 5.3). The splash guard must just clear the ground on both sides.
3. Actuate the left side (Fig. 18 / Item V) of the changeover switch (standard direction of rotation).
4. Lift the equipment 1-2 centimeters and switch on the equipment (see section 6.2).
5. Set the desired speed (from slow to fast) (see section 6.3). Wait until the full speed has been reached and then place the brush on the artificial turf. The equipment will pull away from you.
6. To raise the fibers upright, brush against the direction of the fibers of the artificial turf once the desired speed has been reached. Do not exert any pressure.
7. If required, draw the brush towards you and let it roll away without pressure.
8. Repeat this movement until the desired result has been achieved.

7. Cleaning, maintenance and ordering spare parts

Before putting away or cleaning the equipment, switch off and remove the battery pack.

7.1 Cleaning

- Keep all safety devices, air vents and the motor housing free of dirt and dust as far as possible. Wipe the equipment with a clean cloth or blow it down with compressed air at low pressure.
- We recommend cleaning the equipment immediately each time after use.
- Clean the equipment regularly with a damp cloth. Do not use cleaning agents or solvents; these may be aggressive to the plastic parts in the equipment. Ensure that no water can get into the interior of the equipment. The ingress of water into an electric power tool increases the risk of an electric shock.
- Remove the safety guard and remove any deposits using a brush.

7.2 Maintenance

There are no other parts inside the equipment which require maintenance.

Anl_Picobella_SPK9.indb 26 30.09.2021 14:24:56

7.3 Ordering spare parts
Please provide the following information when ordering spare parts:
- Type of unit
- Article number of the unit
- ID number of the unit
- Spare part number of the required spare part

For our latest prices and information please go to www.Einhell-Service.com

MEDIUM replacement brush (nylon, black)
Art. No. 34.241.20
SOFT replacement brush (nylon, yellow/green)
Art. No. 34.241.21
ULTRA replacement brush (metal)
Art. No. 34.241.22

8. Storage

Store the equipment and its accessories in a dark and dry place at above freezing temperature. The ideal storage temperature is between 5 and 30 °C. Store the electric equipment in its original packaging.

Do not bend the rubber lips of the splash guard (Fig. 19 / Item 14) outwards. Store the equipment in such a way that the rubber lips are not in contact with the floor/ground as far as possible.

9. Transport

- Always hold the equipment with one hand on the handle and the other hand on the additional handle. Do not carry the equipment by its motor housing.
- Secure the equipment against slipping if you transport it in a vehicle.
- As far as possible, use the original packaging for transporting the equipment.

10. Faults

The equipment does not work:
Check that the battery is charged and whether the charging unit is working. If the equipment will not work in spite of the voltage supply being OK, please send it to the customer service address below.

Anl_Picobella_SPK9.indb 27 30.09.2021 14:24:56

11. Charger indicator

Indicator status		Explanations and actions
Red LED	**Green LED**	
Off	Flashing	**Ready for use** The charger is connected to the mains and is ready for use; there is no battery pack in the charger
On	Off	**Charging** The charger is charging the battery pack in quick charge mode. The charging times are shown directly on the charger. Important! The actual charging times may vary slightly from the stated charging times depending on the existing battery charge.
Off	On	**The battery is charged and ready for use.** The unit then changes over to gentle charging mode until the battery is fully charged. To do this, leave the rechargeable battery on the charger for approx. 15 minutes longer. **Action:** Take the battery pack out of the charger. Disconnect the charger from the mains supply.
Flashing	Off	**Adapted charging** The charger is in gentle charging mode. For safety reasons the charging is performed less quickly and takes more time. The reasons can be: - The rechargeable battery has not been used for a very long time. - The battery temperature is outside the ideal range. **Action:** Wait for the charging to be completed; you can still continue to charge the battery pack.
Flashing	Flashing	**Fault** Charging is no longer possible. The battery pack is defective. **Action:** Never charge a defective battery pack. Take the battery pack out of the charger.
On	On	**Temperature fault** The battery pack is too hot (e.g. due to direct sunshine) or too cold (below 0° C). **Action:** Remove the battery pack and keep it at room temperature (approx. 20° C) for one day .

Anl_Picobella_SPK9.indb 28 30.09.2021 14:24:56



For EU countries only

Never place any electric power tools in your household refuse.

To comply with European Directive 2012/19/EC concerning old electric and electronic equipment and its implementation in national laws, old electric power tools have to be separated from other waste and disposed of in an environment-friendly fashion, e.g. by taking to a recycling depot.

Recycling alternative to the return request:
As an alternative to returning the equipment to the manufacturer, the owner of the electrical equipment must make sure that the equipment is properly disposed of if he no longer wants to keep the equipment. The old equipment can be returned to a suitable collection point that will dispose of the equipment in accordance with the national recycling and waste disposal regulations. This does not apply to any accessories or aids without electrical components supplied with the old equipment.

The reprinting or reproduction by any other means, in whole or in part, of documentation and papers accompanying products is permitted only with the express consent of the Einhell Germany AG.

Subject to technical changes

Anl_Picobella_SPK9.indb 29 30.09.2021 14:24:56

Service information

We have competent service partners in all countries named on the guarantee certificate whose contact details can also be found on the guarantee certificate. These partners will help you with all service requests such as repairs, spare and wearing part orders or the purchase of consumables.

Please note that the following parts of this product are subject to normal or natural wear and that the following parts are therefore also required for use as consumables.

Category	Example
Wear parts*	Rechargeable battery, cleaning brush
Consumables*	
Missing parts	

* Not necessarily included in the scope of delivery!

In the effect of defects or faults, please register the problem on the internet at www.Einhell-Service.com. Please ensure that you provide a precise description of the problem and answer the following questions in all cases:

- Did the equipment work at all or was it defective from the beginning?
- Did you notice anything (symptom or defect) prior to the failure?
- What malfunction does the equipment have in your opinion (main symptom)? Describe this malfunction.

Anl_Picobella_SPK9.indb 30 30.09.2021 14:24:57

Warranty certificate

Dear Customer,
All of our products undergo strict quality checks to ensure that they reach you in perfect condition. In the unlikely event that your device develops a fault, please contact our service department at the address shown on this guarantee card. You can also contact us by telephone using the service number shown. Please note the following terms under which guarantee claims can be made:

1. These guarantee terms apply to consumers only, i.e. natural persons intending to use this product neither for their commercial activities nor for any other self-employed activities. These warranty terms regulate additional warranty services, which the manufacturer mentioned below promises to buyers of its new products in addition to their statutory rights of guarantee. Your statutory guarantee claims are not affected by this guarantee. Our guarantee is free of charge to you.
2. The warranty services cover only defects due to material or manufacturing faults on a product which you have bought from the manufacturer mentioned below and are limited to either the rectification of said defects on the product or the replacement of the product, whichever we prefer.
   Please note that our devices are not designed for use in commercial, trade or professional applications. A guarantee contract will not be created if the device has been used by commercial, trade or industrial business or has been exposed to similar stresses during the guarantee period.
3. The following are not covered by our guarantee:
   - Damage to the device caused by a failure to follow the assembly instructions or due to incorrect installation, a failure to follow the operating instructions (for example connecting it to an incorrect mains voltage or current type) or a failure to follow the maintenance and safety instructions or by exposing the device to abnormal environmental conditions or by lack of care and maintenance.
   - Damage to the device caused by abuse or incorrect use (for example overloading the device or the use or unapproved tools or accessories), ingress of foreign bodies into the device (such as sand, stones or dust, transport damage), the use of force or damage caused by external forces (for example by dropping it).
   - Damage to the device or parts of the device caused by normal or natural wear or tear or by normal use of the device.
4. The guarantee is valid for a period of 24 months starting from the purchase date of the device. Guarantee claims should be submitted before the end of the guarantee period within two weeks of the defect being noticed. No guarantee claims will be accepted after the end of the guarantee period. The original guarantee period remains applicable to the device even if repairs are carried out or parts are replaced. In such cases, the work performed or parts fitted will not result in an extension of the guarantee period, and no new guarantee will become active for the work performed or parts fitted. This also applies if an on-site service is used.
5. To make a claim under the guarantee, please register the defective device at:
   www.Einhell-Service.com. Please keep your bill of purchase or other proof of purchase for the new device. Devices that are returned without proof of purchase or without a rating plate shall not be covered by the guarantee, because appropriate identification will not be possible. If the defect is covered by our guarantee, then the item in question will either be repaired immediately and returned to you or we will send you a new replacement.

Of course, we are also happy offer a chargeable repair service for any defects which are not covered by the scope of this guarantee or for units which are no longer covered. To take advantage of this service, please send the device to our service address.

Also refer to the restrictions of this warranty concerning wear parts, consumables and missing parts as set out in the service information in these operating instructions.

Anl_Picobella_SPK9.indb 31 30.09.2021 14:24:57

CE EU

D Konformitätserklärung: Wir erklären Konformität gemäß EU-Richtlinie und Normen für Artikel
GB Declaration of conformity: We declare conformity in accordance with the EU directive and standards for article
F Déclaration de conformité : Nous déclarons la conformité conformément aux directives et normes UE pour l'article
I Dichiarazione di conformità: dichiariamo la conformità secondo la direttiva UE e le norme per l'articolo
DK Overensstemmelseserklæring: Vi attesterer overensstemmelse iht. EU-direktiv samt standarder for artikel
S Försäkran om överensstämmelse: Vi förklarar följande överensstämmelse enl. EU-direktiv och standarder för artikeln
CZ Prohlášení o shodě: Prohlašujeme shodu podle směrnice EU a norem pro výrobek
SK Vyhlásenie o zhode: Vyhlasujeme zhodu podľa smernice EÚ a noriem pre výrobok
NL Conformiteitsverklaring: wij verklaren conformiteit conform EU-richtlijn en normen voor artikel
E Declaración de conformidad: declaramos la conformidad a tenor de la directiva y normas de la UE para el artículo
FIN Standardinmukaisuustodistus: Me vakuutamme, että EU-direktiivin ja standardien vaatimukset täyttyvät tuotteelle
SLO IZJAVA O SKLADNOSTI potrjuje sledečo skladnost s smernico EU in standardi za izdelek
H Konformitási nyilatkozat: Az EU-irányvonal és normák szerinti konformitást jelentjük ki a cikkekhez
RO Declarație de conformitate: Declarăm conformitate conform directivei şi normelor UE pentru articolul
GR Δήλωση συμμόρφωσης: Δηλώνουμε συμμόρφωση σύμφωνα με Οδηγία Ες και πρότυπα για τα προϊόντα
P Declaração de conformidade: Declaramos a conformidade de acordo com a diretiva CE e normas para o artigo
HR IZJAVA O SUKLADNOSTI potvrđuje sljedeću usklađenost prema smjernicama EU i normama za artikl
BIH IZJAVA O SUKLADNOSTI potvrđuje sljedeću usklađenost prema smjernicama EU i normamaza artikl
RS DEKLARACIJA O USUGLAŠENOST potvrđuje sledeću usklađenost prema smernicama EZ i normama za artikal
TR Uygunluk Deklarasyonu: AB direktifi ve ürün standartları uyarınca uygunluğunu beyan ederiz
RUS Заявление о соответствии товара: Настоящим удостоверяется, что следующие продукты соответствуют директивам и нормам ЕС
EE Vastavusdeklaratsioon: Tõendame toote vastavust EL direktiivile ja standarditele
LV Atbilstības deklarācija: Mēs apliecinām atbilstību ES direktīvai un standartiem tālāk minētajām precēm
LT Atitikties deklaracija: deklaruojame, kad gaminys atitinka ES direktyvą ir standartus
PL Deklaracja Zgodności - deklarujemy zgodność wymienionego poniżej artykułu z następującymi normami na podstawie dyrektywy EU
BG Декларация за съответствие: Ние декларираме съответствие на Директивите и нормите (ЕС) за изделия
UKR Декларація відповідності: ми заявляємо про відповідність згідно з Директивою ЄС та стандартами стосовно артикула
MK Изјава за сообразност: Изјавуваме сообразност со регулативата и со нормите на ЕУ за артикли
N Samsvarserklæring: Vi erklærer samsvar i henhold til EU-direktiv og standarder for artikkel
IS Samræmisyfirlýsing: Við útskurðum samræmi við EU-reglugerð og stöðlum fyrir vörutegund

Akku-Oberflächenbürste PICOBELLA (Einhell)

- ☐ **2014/29/EU**
- ☐ **2005/32/EC_2009/125/EC**
  - ☐ **(EU)2015/1188**
- ☐ **2014/35/EU**
- ☐ **2006/28/EC**
- ☒ **2014/30/EU**
- ☐ **2014/32/EU**
- ☐ **2014/53/EU**
- ☐ **2014/68/EU**
- ☐ **(EU)2016/426**
  Notified Body:
- ☐ **(EU)2016/425**
- ☒ **2011/65/EU_(EU)2015/863**

- ☒ **2006/42/EC**
  - ☐ **Annex IV**
    Notified Body:
    Reg. No.:
- ☐ **2000/14/EC_2005/88/EC**
  - ☐ **Annex V**
  - ☐ **Annex VI**
    Noise: measured L_{WA} = dB (A); guaranteed L_{WA} = dB (A)
    P = kW; L/Ø = cm
    Notified Body:
- ☐ **2012/46/EU_(EU)2016/1628**
  Emission No.:

Standard references: EN 60335-1; EN 1083-2; EN 62233; EN 55014-1; EN 55014-2

ISC GmbH · Eschenstraße 6 · D-94405 Landau/Isar

Landau/Isar, den 18.08.2021

Andreas Weichselgartner/General-Manager

Bobby Chen/Product-Management

First CE: 2019
Art.-No.: 34.242.00 **I.-No.:** 21021
Subject to change without notice

Archive-File/Record: NAPR026368
Documents registrar: Daniel Laubmeier
Wiesenweg 22, D-94405 Landau/Isar

* *GB* Cordless surface brush · *F* Brosse de surface sans fil · *I* Spazzola per superfici a batteria · *DK/N* Akku-overfladebørste · *S* Batteridriven ytborste · *CZ* Akumulátorový kartáč na čištění povrchů · *SK* Akumulátorová kefa na čistenie povrchov · *NL* Accu oppervlakteborstel · *E* Cepillo para superficies inalámbrico · *FIN* Akku-pintaharja · *SLO* Akumulatorska površinska ščetka · *H* Akkus-felülettisztító kefe · *RO* Perie pentru suprafețe cu acumulator · *GR* Βούρτσα επιφανειών, με μπαταρία · *P* Escova de limpar superfícies sem fio · *HR/BIH* Četka za čišćenje površine akumulatora · *RS* Četka za čišćenje površine akumulatora · *PL* Akumulatorowa szczotka do nawierzchni · *TR* Akülü yüzey fırçası · *RUS* Аккумуляторная щетка для чистки поверхностей · *EE* Akuhari · *LV* Virsmas suka ar akumulatora piedziņu · *LT* Akumuliatorinis paviršių valymo šepetys · *BG* Акумулаторна четка за повърхности · *UKR* Акумуляторна щітка для поверхні · *MK* Четка за чистење на површини на батерии

Anl_Picobella_SPK9.indb 166 30.09.2021 14:25:15

UK CA Declaration of conformity

We, Einhell UK Ltd

Champions Business Park, First Floor Unit 10, Arrowe Brook Rd, Upton, Wirral CH49 0AB, United Kingdom

declare the conformity to UK standards and legislation was assessed for:

Cordless Surface Brush PICOBELLA (Einhell)

UK legislation

- ☐ **Simple Pressure Vessels (Safety) Regulation**
- ☒ **Electromagnetic Compatibility Regulation**
- ☐ **Electrical Equipment (Safety) Regulation**
- ☐ **Measuring Instruments Regulation**
- ☐ **Radio Equipment Regulation**
- ☐ **Pressure Equipment (Safety) Regulation**
- ☐ **Personal Protective Equipment Regulation**
- ☐ **The Ecodesign for Energy-Related Products and Energy Information Regulation**
- ☒ **The Restriction of the Use of Certain Hazardous Substances in Electrical and Electronic Equipment Regulation**
- ☐ **Noise Emission in the Environment by Equipment for use Outdoors Regulation**
  Noise: measured L_{WA} = dB (A); guaranteed L_{WA} = dB (A)
- ☒ **Supply of Machinery (Safety) Regulation**
  - ☐ **Annex IV**
    UK Approved Body:

    UKTE Certificate No.:

Standards: BS 60335-1; BS 1083-2; BS 62233; BS 55014-1; BS 55014-2

Wirral, 2021.18.08

Tom Chambers, Managing Director Einhell UK Ltd.

Article Number: 34.242.00 **I.-No.:** 21021
Subject to change without notice

Archive-File/Record: NAPR026368
Documents registrar: Daniel Laubmeier
Wiesenweg 22, 94405 Landau/Isar, Germany

Anl_Picobella_SPK9.indb 167 30.09.2021 14:25:16