TE-CS 18/89 Li

D **Originalbetriebsanleitung**
Akku-Mini-Handkreissäge

GB **Original operating instructions**
Cordless mini hand-held circular saw

F **Instructions d'origine**
Mini scie circulaire sans fil

I **Istruzioni per l'uso originali**
Mini sega circolare manuale a batteria

DK/N **Original betjeningsvejledning**
Akku-mini-håndrundsav

S **Original-bruksanvisning**
Batteridriven mini-handcirkelsåg

NL **Originele handleiding**
Accu mini handcirkelzaag

E **Manual de instrucciones original**
Minisierra circular de mano inalámbrica

FIN **Alkuperäiskäyttöohje**
Akkukäyttöinen pienois-käsipyörösaha

GR **Πρωτότυπες Οδηγίες χρήσης**
Κυκλικό πριόνι χεριού, με μπαταρία

9

Art.-Nr.: 43.311.00 **I.-Nr.: 11019**

Anl_TE-CS_18_89_Li_SPK9.indb 1 05.05.2020 13:00:34

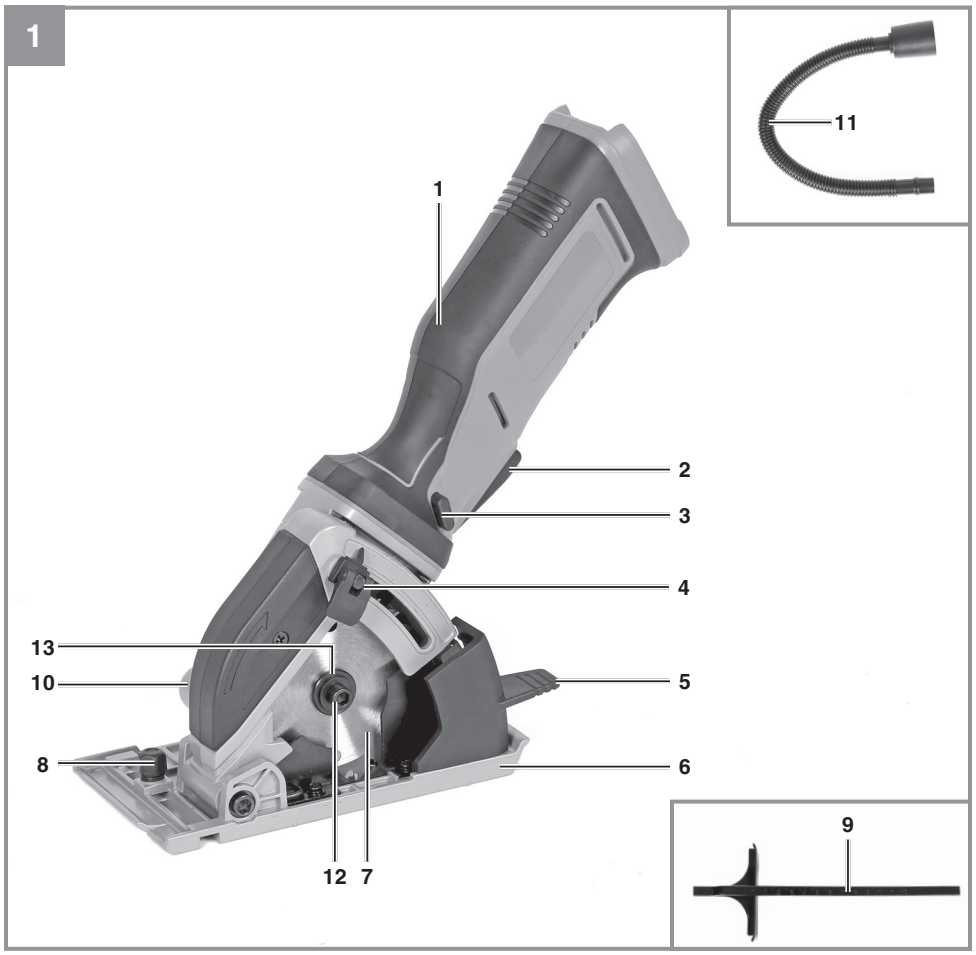

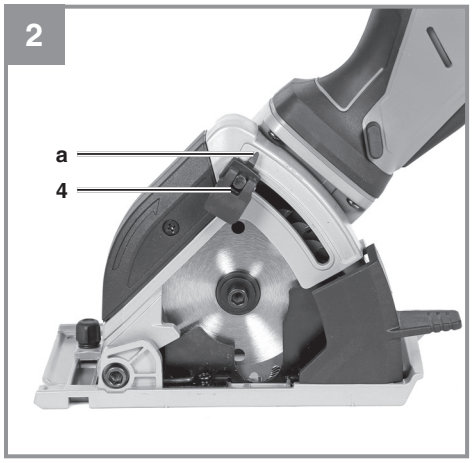

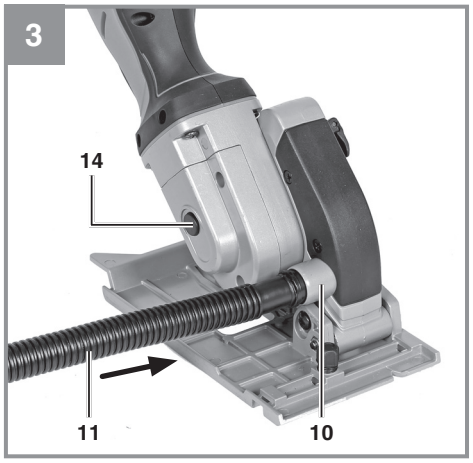

Anl_TE-CS_18_89_Li_SPK9.indb 2 05.05.2020 13:00:35

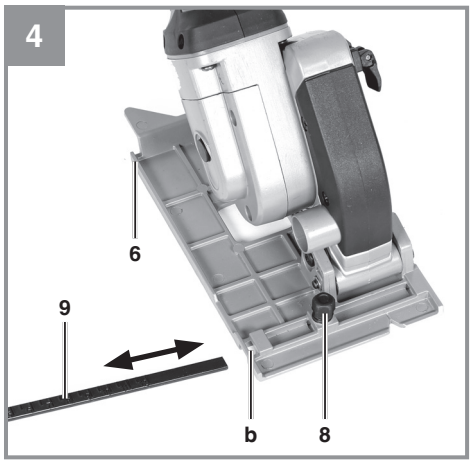

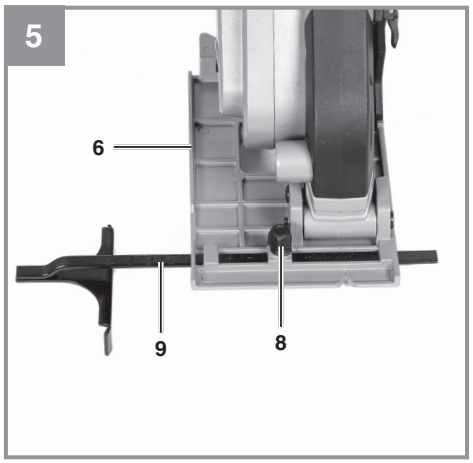

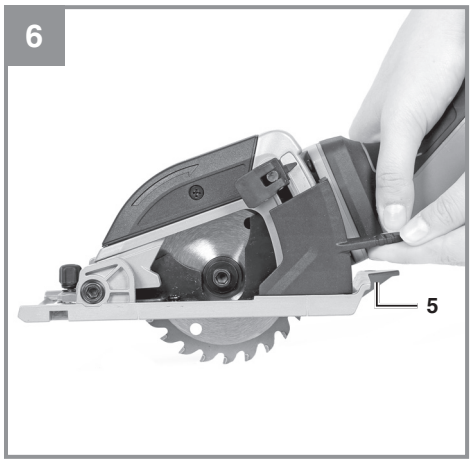

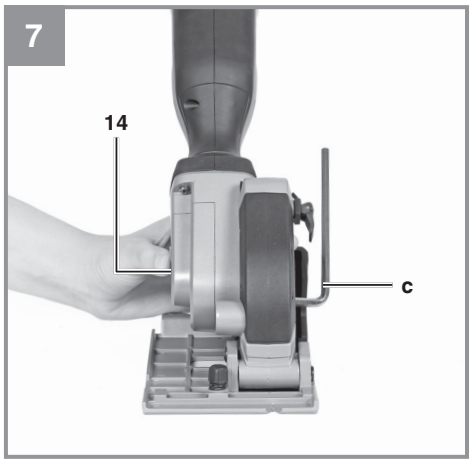

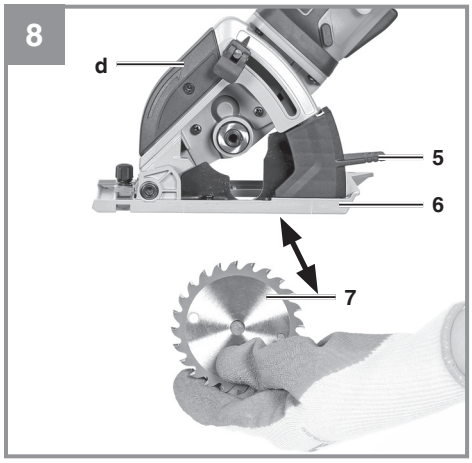

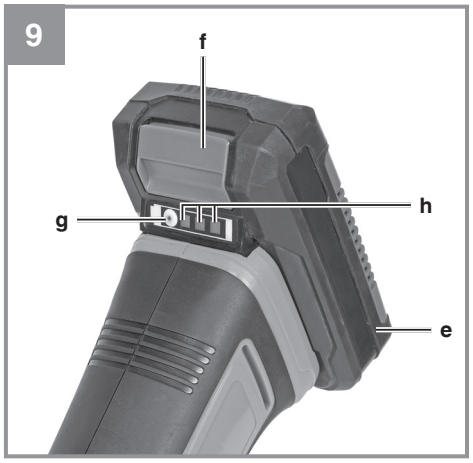

Anl_TE-CS_18_89_Li_SPK9.indb 3 05.05.2020 13:00:37

11



Anl_TE-CS_18_89_Li_SPK9.indb 4 05.05.2020 13:00:39



Danger! - Read the operating instructions to reduce the risk of inquiry



Caution! Wear ear-muffs. The impact of noise can cause damage to hearing.



Caution! Wear a breathing mask. Dust which is injurious to health can be generated when working on wood and other materials. Never use the device to work on any materials containing asbestos!



Caution! Wear safety goggles. Sparks generated during working or splinters, chips and dust emitted by the device can cause loss of sight.



Pull out the plug or battery pack!

Anl_TE-CS_18_89_Li_SPK9.indb 17 05.05.2020 13:00:41

Danger!
When using the equipment, a few safety precautions must be observed to avoid injuries and damage. Please read the complete operating instructions and safety regulations with due care. Keep this manual in a safe place, so that the information is available at all times. If you give the equipment to any other person, hand over these operating instructions and safety regulations as well. We cannot accept any liability for damage or accidents which arise due to a failure to follow these instructions and the safety instructions.

1. Safety regulations

The corresponding safety information can be found in the enclosed booklet.
Warning!
Read all the safety information, instructions, illustrations and technical data provided on or with this power tool. Failure to adhere to the following instructions may result in electric shock, fire and/or serious injury.
Keep all the safety information and instructions in a safe place for future use.

2. Layout and items supplied

2.1 Layout (Fig. 1/3)
1. Handle
2. ON/OFF switch
3. Locking button
4. Locking lever for cutting depth setting
5. Lever for raising the soleplate
6. Soleplate
7. Saw blade
8. Locking screw for parallel stop
9. Parallel stop
10. Connection for dust extraction system
11. Adapter for dust extraction system
12. Screw for securing the saw blade
13. Flange
14. Spindle lock

2.2 Items supplied
Please check that the article is complete as specified in the scope of delivery. If parts are missing, please contact our service center or the sales outlet where you made your purchase at the latest within 5 working days after purchasing the product and upon presentation of a valid bill of purchase. Also, refer to the warranty table in the service information at the end of the operating instructions.

- Open the packaging and take out the equipment with care.
- Remove the packaging material and any packaging and/or transportation braces (if available).
- Check to see if all items are supplied.
- Inspect the equipment and accessories for transport damage.
- If possible, please keep the packaging until the end of the guarantee period.

Danger!
The equipment and packaging material are not toys. Do not let children play with plastic bags, foils or small parts. There is a danger of swallowing or suffocating!

- Cordless mini hand-held circular saw
- Parallel stop
- Adapter for dust extraction system
- Hexagon key
- Original operating instructions
- Safety instructions

3. Proper use

The cordless mini hand-held circular saw is designed for sawing straight cuts in wood, wood-type materials and plastics, using the appropriate blade. When you are cutting plastics, avoid overheating the tips of the blade as this could melt the material. Even tiles can be cut with this saw, provided the correct cutting wheel is fitted.

The equipment is to be used only for its prescribed purpose. Any other use is deemed to be a case of misuse. The user / operator and not the manufacturer will be liable for any damage or injuries of any kind caused as a result of this.

Please note that our equipment has not been designed for use in commercial, trade or industrial applications. Our warranty will be voided if the machine is used in commercial, trade or industrial businesses or for equivalent purposes.

Anl_TE-CS_18_89_Li_SPK9.indb 18 05.05.2020 13:00:41

4. Technical data

Motor power supply: ..... 18 V DC
Idling speed: .....3,500 min^{-1}
Cutting depth: ..... max. 28 mm
Saw blade: .....Ø 89 mm
Blade holder: .....Ø 10 mm
Weight: .....1.75 kg

Danger!
Sound and vibration
Sound and vibration values were measured in accordance with EN 62841.

L_{pA} sound pressure level ..... 90.1 dB(A)
K_{pA} uncertainty .....3 dB
L_{WA} sound power level ..... 101.1 dB(A)
K_{WA} uncertainty .....3 dB

Wear ear-muffs.
The impact of noise can cause damage to hearing.

Total vibration values (vector sum of three directions) determined in accordance with EN 62841.

Handle
Vibration emission value a_h = 5.14 m/s^2
K uncertainty = 1.5 m/s^2

The stated vibration emission levels and stated noise emission values were measured in accordance with a set of standardized criteria and can be used to compare one power tool with another.

The stated vibration emission levels and stated noise emission values can also be used to make an initial assessment of exposure.

Warning:
The vibration and noise emission levels may vary from the level specified during actual use, depending on the way in which the power tool is used, especially the type of workpiece it is used for.

Keep the noise emissions and vibrations to a minimum.
- Only use appliances which are in perfect working order.
- Service and clean the appliance regularly.
- Adapt your working style to suit the appliance.
- Do not overload the appliance.
- Have the appliance serviced whenever necessary.
- Switch the appliance off when it is not in use.
- Wear protective gloves.

Caution!
Residual risks
Even if you use this electric power tool in accordance with instructions, certain residual risks cannot be rules out. The following hazards may arise in connection with the equipment's construction and layout:
1. Lung damage if no suitable protective dust mask is used.
2. Damage to hearing if no suitable ear protection is used.
3. Health damage caused by hand-arm vibrations if the equipment is used over a prolonged period or is not properly guided and maintained.

5. Before starting the equipment

Warning!
Always remove the battery pack before making adjustments to the equipment.

5.1 Setting the cutting depth (Figure 2)
- Undo the locking lever for setting the cutting depth (4).
- Set the cutting depth in accordance with the scale (a).
- When cutting wood or plastic the selected cutting depth should be a little larger than the material thickness.
- To prevent damage to underlying surfaces, the cutting depth can be set exactly to the thickness of the material. However, this will result in a slightly unclean cut.

Anl_TE-CS_18_89_Li_SPK9.indb 19 05.05.2020 13:00:41

5.2 Extraction of dust and chips (Figure 3)
Connect your tool to an extraction unit or vacuum cleaner. This will provide excellent extraction of chips and dust from the workpiece.
The benefits are that you will protect both the equipment and your own health. Your work area will also be clean and safe.

- Attach the adapter for the dust extraction system (11) to the connection for the dust extraction system (10).
- You can then connect a suitable vacuum cleaner (not supplied) to the dust extraction system adapter (11).

5.3 Parallel stop (Figure 4/5)

- The parallel stop (9) enables you to saw parallel lines.
- Loosen the locking screw for the parallel stop (8) on the saw foot (6).
- To assemble, slide the parallel stop (9) into the guide (b) on the saw foot (6) (see Figure 4).
- Set the required spacing and then tighten the locking screw (8) again.
- Using the parallel stop: Position the parallel stop (9) flat on the edge of the workpiece and start the cut.

6. Operation

6.1 Working with the cordless mini hand-held circular saw

- Always hold the cordless mini hand-held circular saw firmly.
- Do not use force!
- Push forwards gently and evenly with the cordless mini hand-held circular saw.
- The waste piece should be on the left-hand side of the cordless mini hand-held circular saw so that the wide section of the support bench supports its full area.
- If you are sawing down a line that has been drawn, guide the cordless mini hand-held circular saw along the corresponding notch.
- Clamp small pieces of wood securely before sawing them. Never hold them with your hand.
- Always follow the safety instructions. Wear safety goggles.
- Do not use defective saw blades or blades that are cracked or broken.
- Do not use any flanges / flange nuts whose bore hole is larger or smaller than those in the saw blade.
- The saw blade must not be decelerated by hand or by applying lateral pressure to the blade.
- The soleplate must not jam and must return to its initial position after the operation has been completed.
- Before you use the cordless mini hand-held circular saw, check the function of the soleplate with the rechargeable battery taken out.
- Before you use the machine, ensure that the safety equipment such as the soleplate, flanges and adjustment devices are in working order and are correctly adjusted and secure.
- You can connect a suitable dust extraction system to the dust extraction adapter (11). Ensure that the dust extraction system is safely and correctly connected.

Danger! Always take out the rechargeable battery before doing any work on the equipment!

6.2 Using the cordless mini hand-held circular saw

- Select a suitable blade for the material you wish to saw.
- Check the condition and sharpness of the blade.
- Set the cutting depth.
- Pick up the tool and make sure that no air vents are covered.
- Switch on the tool and wait for a few seconds for the blade to reach operating speed.
- Push the saw forwards through the workpiece. Never cut backwards!
- Exert only little pressure on the tool when cutting.
- The base plate must always lie flat on the workpiece.
- Before you start your sawing work on the workpiece, you can raise the soleplate (6) with the lever (5) as shown in Fig. 6. Starting the sawing work is then easier when you want to begin at the edge of a workpiece.

6.3 Switching ON/OFF (Fig. 12)
To switch on:
Press the locking button (3) and the ON/OFF switch (2) at the same time

- Allow the saw blade to accelerate until it reaches full speed. Then slowly move the saw blade along the cutting line. Only exert gentle pressure on the saw blade as you do so.

Anl_TE-CS_18_89_Li_SPK9.indb 20 05.05.2020 13:00:42

To switch off:
Release the locking button and ON/OFF switch
- If you release the handle the equipment will shut down automatically which means that it cannot operate accidentally.
- Ensure that you do not cover or block the ventilation openings whilst working with the tool.
- Do not slow down the saw blade after you switch it off by pressing it sideways.
- Important! Do not put down the machine until the saw blade has reached a complete standstill.

6.4 Changing the saw blade (Fig. 1/7-8)
Warning!
Always remove the battery pack before making adjustments to the equipment.

Use only saw blades which comply with standard EN 847-1 and are of the same type as the saw blade supplied with this circular saw. Ask your dealer for advice.

Caution! For safety reasons the mini handheld circular saw must not be operated with the hex key inserted in it.

- Press the spindle lock (14) and slacken the screw for securing the saw blade (12) by turning it in a clockwise direction using the hex key (c).
- Press the locking button (3) and use the lever (5) to raise the adjustable soleplate (6) and hold.
- Remove the saw blade (7) in a downwards direction.
- Clean the flange and insert the new saw blade. Pay attention to the running direction (see arrow on the housing (c) and saw blade).
- Tighten the screw to secure the saw blade (12), check it runs true.
- Before you press the On/Off switch, make sure that the saw blade is correctly fitted and that moving parts run smoothly and the clamping screws are tightened securely.

6.5 Charging the LI battery pack (Fig. 9-10)
1. Remove the battery pack (e) from the handle, pressing the pushlock buttons (f) downwards to do so.
2. Check that your mains voltage is the same as that marked on the rating plate of the battery charger. Insert the power plug of the charger (i) into the mains socket outlet. The green LED will then begin to flash.
3. Push the battery pack onto the battery charger.

In section 10 “Charger indicator” you will find a table with an explanation of the LED indicator on the charger.

Important!
Only use the rechargeable battery and charger when dry and with an ambient temperature of 10-40°C.

Store the rechargeable battery, cordless tool and charger in a dry place with an ambient temperature of: Rechargeable battery = 10-20°C
Cordless tool, charger = 10-40°C.

If the battery pack fails to become charged, please check
- whether there is voltage at the socket-outlet
- whether there is proper contact at the charging contacts on the charger.

If the battery still fails to become charged, please return
- the charger
- the battery pack

to our Customer Service Department.

To ensure that items are properly packaged and delivered when you send them to us, please contact our customer service or the point of sale at which the equipment was purchased.

When shipping or disposing of batteries and cordless tools, always ensure that they are packed individually in plastic bags to prevent short circuits and fires.

To ensure that the battery pack provides long service, you should take care to recharge it promptly. You must recharge the battery pack when you notice that the performance of the device drops. Never allow the battery pack to become fully discharged. This will cause it to develop a defect.

Anl_TE-CS_18_89_Li_SPK9.indb 21 05.05.2020 13:00:42

6.6 Battery capacity indicator (Fig. 9 – Item h)
Press the battery capacity indicator switch (i). The battery capacity indicator (h) shows the charge status of the battery using 3 LEDs.

All 3 LEDs are lit:
The battery is fully charged.

2 or 1 LED(s) are lit:
The battery has an adequate remaining charge.

1 LED blinks:
The battery is empty, recharge the battery.

All LEDs blink:
The battery pack has undergone exhaustive discharge and is defective. Do not use or charge a defective battery pack.

7. Cleaning, maintenance and ordering of spare parts

Danger!
Always pull out the battery pack before starting any cleaning work.

7.1 Cleaning
- Keep all safety devices, air vents and the motor housing free of dirt and dust as far as possible. Wipe the equipment with a clean cloth or blow it with compressed air at low pressure.
- We recommend that you clean the device immediately each time you have finished using it.
- Clean the equipment regularly with a moist cloth and some soft soap. Do not use cleaning agents or solvents; these could attack the plastic parts of the equipment. Ensure that no water can seep into the device. The ingress of water into an electric tool increases the risk of an electric shock.

7.2 Carbon brushes
In case of excessive sparking, have the carbon brushes checked only by a qualified electrician. **Danger!** The carbon brushes should not be rep laced by anyone but a qualified electrician.

7.3 Maintenance
There are no parts inside the equipment which require additional maintenance.

7.4 Ordering replacement parts:
Please quote the following data when ordering replacement parts:
- Type of machine
- Article number of the machine
- Identification number of the machine
- Replacement part number of the part required

For our latest prices and information please go to www.isc-gmbh.info

8. Disposal and recycling

The equipment is supplied in packaging to prevent it from being damaged in transit. The raw materials in this packaging can be reused or recycled. The equipment and its accessories are made of various types of material, such as metal and plastic. Never place defective equipment in your household refuse. The equipment should be taken to a suitable collection center for proper disposal. If you do not know the whereabouts of such a collection point, you should ask in your local council offices.

9. Storage

Store the equipment and accessories in a dark and dry place at above freezing temperature. The ideal storage temperature is between 5 and 30 °C. Store the electric tool in its original packaging.

Anl_TE-CS_18_89_Li_SPK9.indb 22 05.05.2020 13:00:42

10. Charger indicator

Indicator status		Explanations and actions
Red LED	**Green LED**	
Off	Flashing	**Ready for use** The charger is connected to the mains and is ready for use; there is no battery pack in the charger
On	Off	**Charging** The charger is charging the battery pack in quick charge mode. The charging times are shown directly on the charger. Important! The actual charging times may vary slightly from the stated charging times depending on the existing battery charge.
Off	On	**The battery is charged and ready for use.** The unit then changes over to gentle charging mode until the battery is fully charged. To do this, leave the rechargeable battery on the charger for approx. 15 minutes longer. **Action:** Take the battery pack out of the charger. Disconnect the charger from the mains supply.
Flashing	Off	**Adapted charging** The charger is in gentle charging mode. For safety reasons the charging is performed less quickly and takes more time. The reasons can be: - The rechargeable battery has not been used for a very long time. - The battery temperature is outside the ideal range. **Action:** Wait for the charging to be completed; you can still continue to charge the battery pack.
Flashing	Flashing	**Fault** Charging is no longer possible. The battery pack is defective. **Action:** Never charge a defective battery pack. Take the battery pack out of the charger.
On	On	**Temperature fault** The battery pack is too hot (e.g. due to direct sunshine) or too cold (below 0° C). **Action:** Remove the battery pack and keep it at room temperature (approx. 20° C) for one day .

Anl_TE-CS_18_89_Li_SPK9.indb 23 05.05.2020 13:00:42



For EU countries only

Never place any electric power tools in your household refuse.

To comply with European Directive 2012/19/EC concerning old electric and electronic equipment and its implementation in national laws, old electric power tools have to be separated from other waste and disposed of in an environment-friendly fashion, e.g. by taking to a recycling depot.

Recycling alternative to the return request:
As an alternative to returning the equipment to the manufacturer, the owner of the electrical equipment must make sure that the equipment is properly disposed of if he no longer wants to keep the equipment. The old equipment can be returned to a suitable collection point that will dispose of the equipment in accordance with the national recycling and waste disposal regulations. This does not apply to any accessories or aids without electrical components supplied with the old equipment.

The reprinting or reproduction by any other means, in whole or in part, of documentation and papers accompanying products is permitted only with the express consent of the iSC GmbH.

Subject to technical changes

Anl_TE-CS_18_89_Li_SPK9.indb 24 05.05.2020 13:00:42

Service information

We have competent service partners in all countries named on the guarantee certificate whose contact details can also be found on the guarantee certificate. These partners will help you with all service requests such as repairs, spare and wearing part orders or the purchase of consumables.

Please note that the following parts of this product are subject to normal or natural wear and that the following parts are therefore also required for use as consumables.

Category	Example
Wear parts*	Carbon brushes, Battery
Consumables*	Saw blade, cutting wheel, drive belt
Missing parts	

* Not necessarily included in the scope of delivery!

In the effect of defects or faults, please register the problem on the internet at www.isc-gmbh.info. Please ensure that you provide a precise description of the problem and answer the following questions in all cases:

- Did the equipment work at all or was it defective from the beginning?
- Did you notice anything (symptom or defect) prior to the failure?
- What malfunction does the equipment have in your opinion (main symptom)? Describe this malfunction.

Anl_TE-CS_18_89_Li_SPK9.indb 25 05.05.2020 13:00:42

Warranty certificate

Dear Customer,
All of our products undergo strict quality checks to ensure that they reach you in perfect condition. In the unlikely event that your device develops a fault, please contact our service department at the address shown on this guarantee card. You can also contact us by telephone using the service number shown. Please note the following terms under which guarantee claims can be made:

1. These guarantee terms apply to consumers only, i.e. natural persons intending to use this product neither for their commercial activities nor for any other self-employed activities. These warranty terms regulate additional warranty services, which the manufacturer mentioned below promises to buyers of its new products in addition to their statutory rights of guarantee. Your statutory guarantee claims are not affected by this guarantee. Our guarantee is free of charge to you.
2. The warranty services cover only defects due to material or manufacturing faults on a product which you have bought from the manufacturer mentioned below and are limited to either the rectification of said defects on the product or the replacement of the product, whichever we prefer.
   Please note that our devices are not designed for use in commercial, trade or professional applications. A guarantee contract will not be created if the device has been used by commercial, trade or industrial business or has been exposed to similar stresses during the guarantee period.
3. The following are not covered by our guarantee:
   - Damage to the device caused by a failure to follow the assembly instructions or due to incorrect installation, a failure to follow the operating instructions (for example connecting it to an incorrect mains voltage or current type) or a failure to follow the maintenance and safety instructions or by exposing the device to abnormal environmental conditions or by lack of care and maintenance.
   - Damage to the device caused by abuse or incorrect use (for example overloading the device or the use or unapproved tools or accessories), ingress of foreign bodies into the device (such as sand, stones or dust, transport damage), the use of force or damage caused by external forces (for example by dropping it).
   - Damage to the device or parts of the device caused by normal or natural wear or tear or by normal use of the device.
4. The guarantee is valid for a period of 24 months starting from the purchase date of the device. Guarantee claims should be submitted before the end of the guarantee period within two weeks of the defect being noticed. No guarantee claims will be accepted after the end of the guarantee period. The original guarantee period remains applicable to the device even if repairs are carried out or parts are replaced. In such cases, the work performed or parts fitted will not result in an extension of the guarantee period, and no new guarantee will become active for the work performed or parts fitted. This also applies if an on-site service is used.
5. To make a claim under the guarantee, please register the defective device at: www.isc-gmbh.info. Please keep your bill of purchase or other proof of purchase for the new device. Devices that are returned without proof of purchase or without a rating plate shall not be covered by the guarantee, because appropriate identification will not be possible. If the defect is covered by our guarantee, then the item in question will either be repaired immediately and returned to you or we will send you a new replacement.

Of course, we are also happy offer a chargeable repair service for any defects which are not covered by the scope of this guarantee or for units which are no longer covered. To take advantage of this service, please send the device to our service address.

Also refer to the restrictions of this warranty concerning wear parts, consumables and missing parts as set out in the service information in these operating instructions.

Anl_TE-CS_18_89_Li_SPK9.indb 26 05.05.2020 13:00:42