Einhell

TE-PS 165

D **Originalbetriebsanleitung**
Tauchsäge

GB **Original operating instructions**
Plunge saw

F **Instructions d'origine**
Scie plongeante

I **Istruzioni per l'uso originali**
Sega ad immersione

CZ **Originální návod k obsluze**
Ponorná pila

SK **Originálny návod na obsluhu**
Ponorná píla

NL **Originele handleiding**
Dompelzaag

E **Manual de instrucciones original**
Sierra de inmersión

RUS **Оригинальное руководство по эксплуатации**
Дисковая погружная пила

SLO **Originalna navodila za uporabo**
Potopna žaga

H **Eredeti használati utasítás**
Merülőfűrész

RO **Instrucțiuni de utilizare originale**
Ferăstrău circular de mână cu plonjare

GR **Πρωτότυπες Οδηγίες χρήσης**
Βυθιζόμενο πριόνι

9

Art.-Nr.: 43.313.00 **I.-Nr.: 11017**

Anl_TE_PS_165_SPK9.indb 1 16.02.2018 09:56:06

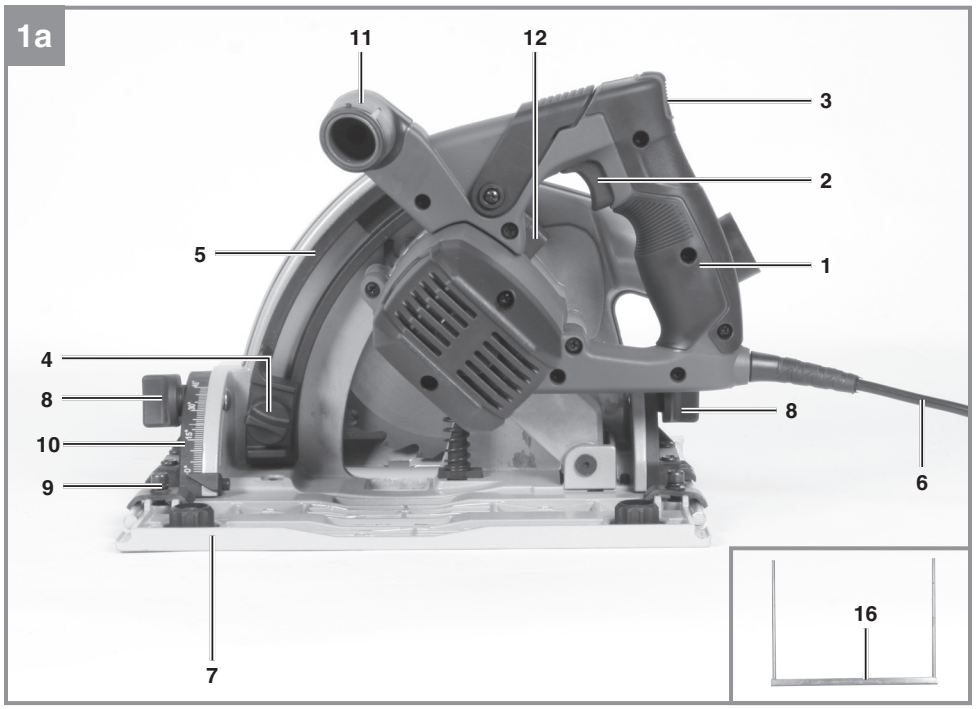

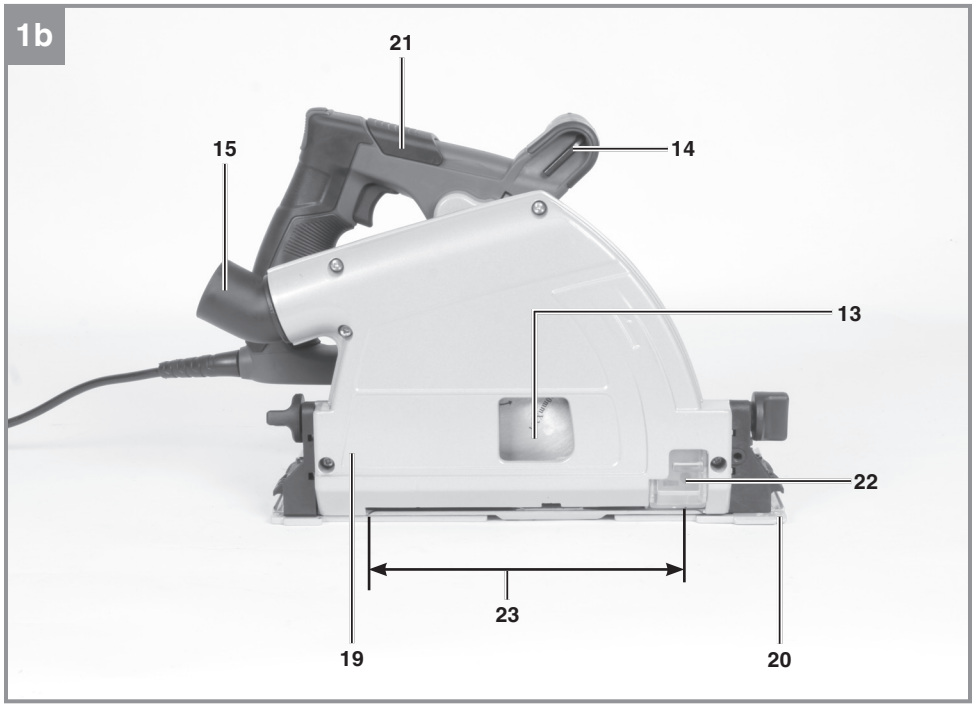

Anl_TE_PS_165_SPK9.indb 2 16.02.2018 09:56:07

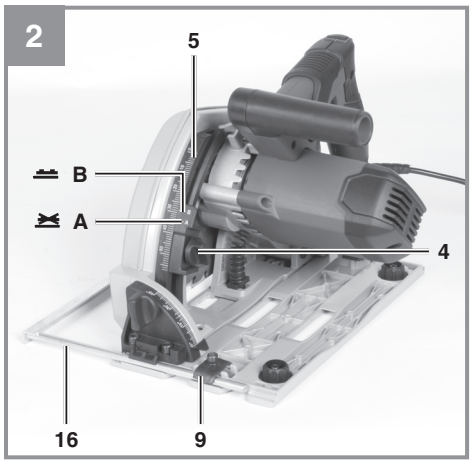

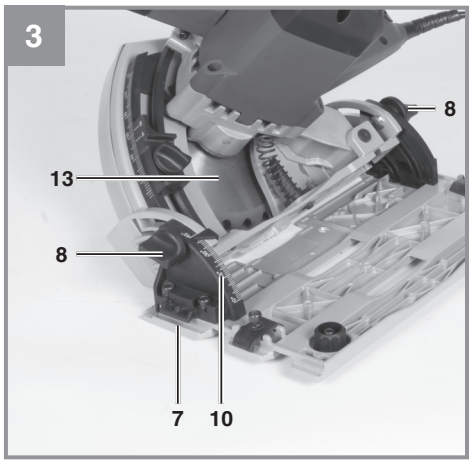

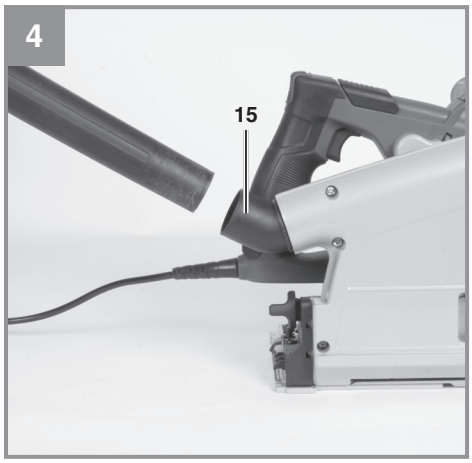

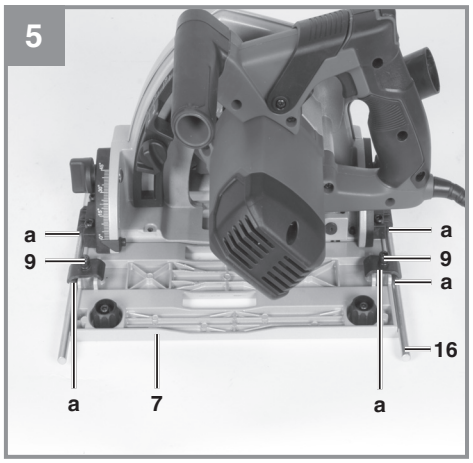

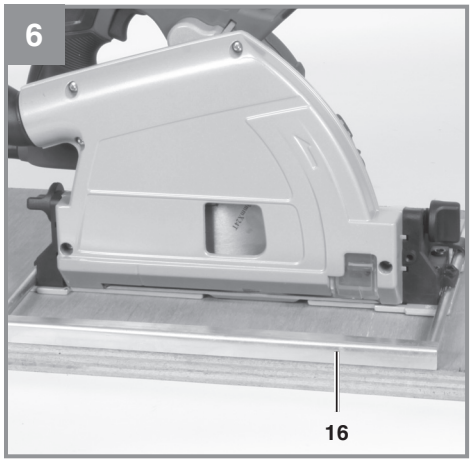

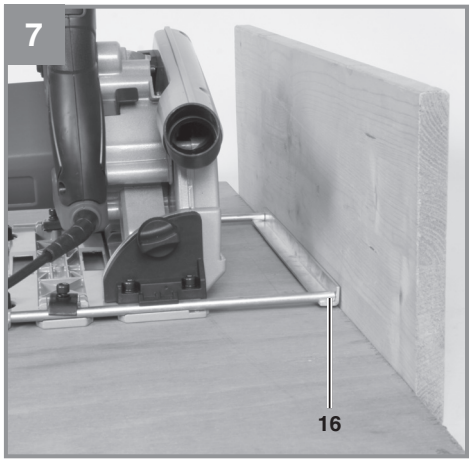

Anl_TE_PS_165_SPK9.indb 3 16.02.2018 09:56:09

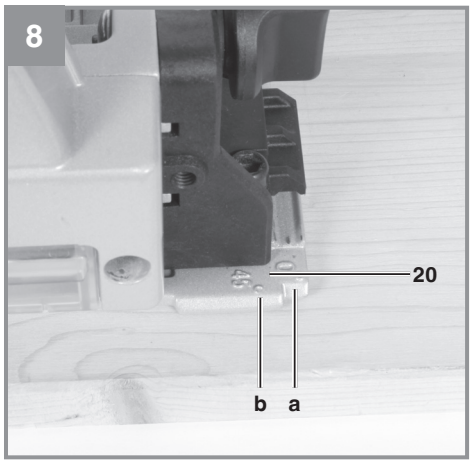

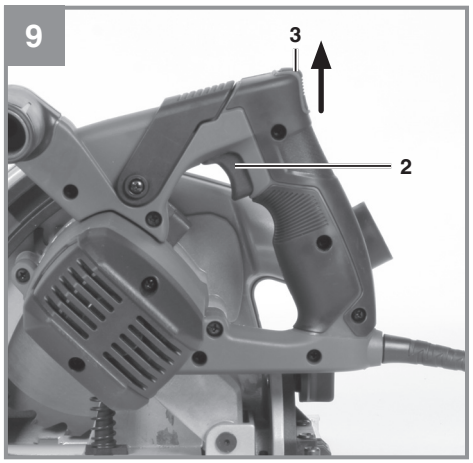

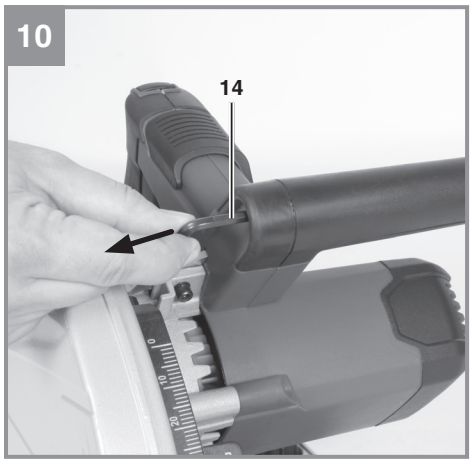

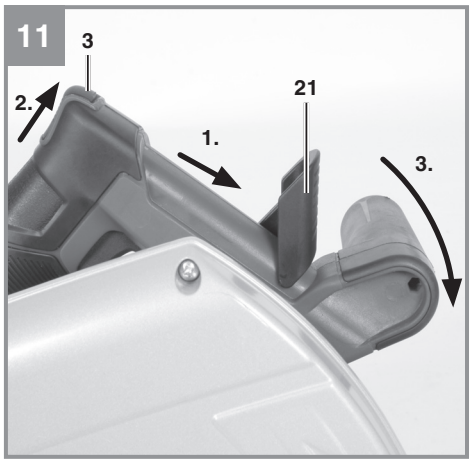

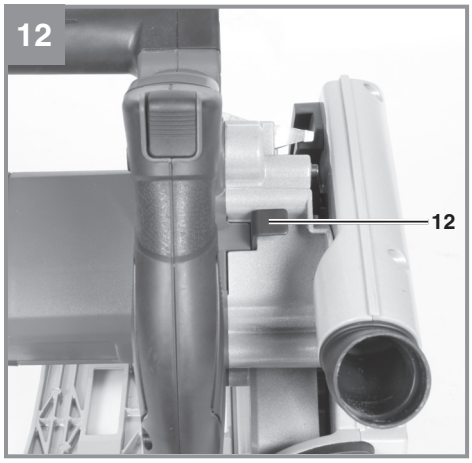

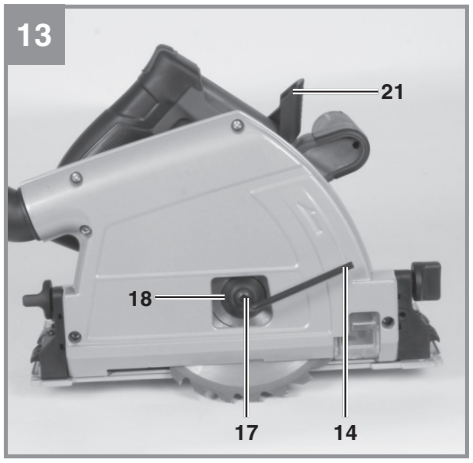

Anl_TE_PS_165_SPK9.indb 4 16.02.2018 09:56:14

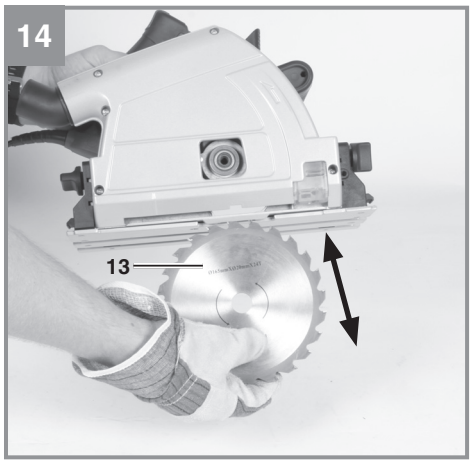

Anl_TE_PS_165_SPK9.indb 5 16.02.2018 09:56:18

Table of contents

1. Safety regulations
2. Layout and items supplied
3. Proper use
4. Technical data
5. Before starting the equipment
6. Operation
7. Replacing the power cable
8. Cleaning, maintenance and ordering of spare parts
9. Disposal and recycling
10. Storage

Anl_TE_PS_165_SPK9.indb 18 16.02.2018 09:56:21



Danger! - Read the operating instructions to reduce the risk of inquiry



Caution! Wear ear-muffs. The impact of noise can cause damage to hearing.



Caution! Wear a breathing mask. Dust which is injurious to health can be generated when working on wood and other materials. Never use the device to work on any materials containing asbestos!



Caution! Wear safety goggles. Sparks generated during working or splinters, chips and dust emitted by the device can cause loss of sight.

Anl_TE_PS_165_SPK9.indb 19 16.02.2018 09:56:21

Danger!
When using the equipment, a few safety precautions must be observed to avoid injuries and damage. Please read the complete operating instructions and safety regulations with due care. Keep this manual in a safe place, so that the information is available at all times. If you give the equipment to any other person, hand over these operating instructions and safety regulations as well. We cannot accept any liability for damage or accidents which arise due to a failure to follow these instructions and the safety instructions.

1. Safety regulations

The corresponding safety information can be found in the enclosed booklet.
Danger!
Read all safety regulations and instructions. Any errors made in following the safety regulations and instructions may result in an electric shock, fire and/or serious injury.
Keep all safety regulations and instructions in a safe place for future use.

2. Layout and items supplied

2.1 Layout (Fig. 1a/1b/13)
1. Handle
2. On/Off switch
3. Locking button for On/Off switch
4. Locking screw for sawing depth
5. Scale for sawing depth
6. Power cable
7. Soleplate
8. Locking levers for miter setting
9. Locking screws for parallel stop
10. Scale for miter angle
11. Additional handle
12. Spindle lock
13. Saw blade
14. Saw blade wrench
15. Connection for sawdust extractor
16. Parallel stop
17. Screw for securing the saw blade
18. Flange
19. Guard hood
20. Line guide
21. Blade lock for changing the saw blade
22. Adjustable window
23. Cutting area

2.2 Items supplied
Please check that the article is complete as specified in the scope of delivery. If parts are missing, please contact our service center or the sales outlet where you made your purchase at the latest within 5 working days after purchasing the product and upon presentation of a valid bill of purchase. Also, refer to the warranty table in the service information at the end of the operating instructions.
- Open the packaging and take out the equipment with care.
- Remove the packaging material and any packaging and/or transportation braces (if available).
- Check to see if all items are supplied.
- Inspect the equipment and accessories for transport damage.
- If possible, please keep the packaging until the end of the guarantee period.

Danger!
The equipment and packaging material are not toys. Do not let children play with plastic bags, foils or small parts. There is a danger of swallowing or suffocating!

- Plunge saw
- Saw blade
- Saw blade wrench
- Parallel stop
- Original operating instructions
- Safety instructions

3. Proper use

The plunge saw is designed for sawing straight cuts in wood, wood-type materials and plastics. When you are cutting plastics, avoid overheating the tips of the blade as this could melt the material.

The equipment is to be used only for its prescribed purpose. Any other use is deemed to be a case of misuse. The user / operator and not the manufacturer will be liable for any damage or injuries of any kind caused as a result of this.

Please note that our equipment has not been designed for use in commercial, trade or industrial applications. Our warranty will be voided if the machine is used in commercial, trade or industrial businesses or for equivalent purposes.

Anl_TE_PS_165_SPK9.indb 20 16.02.2018 09:56:21

4. Technical data

Mains voltage: .....220-240 V~ 50 Hz
Power input: ..... 1200 W
Idling speed: .....5200 min^{-1}
Cutting depth at 90°: ..... 56 mm
Cutting depth at 45°: ..... 42 mm
Saw blade: .....Ø 165 mm
Blade holder: .....Ø 20 mm
Blade thickness: ..... 1.6 mm
Protection class: .....II / ⧈
Weight: .....5.0 kg

Danger!
Sound and vibration
Sound and vibration values were measured in accordance with EN 62841.

L_{pA} sound pressure level ..... 91 dB(A)
K_{pA} uncertainty .....3 dB
L_{WA} sound power level ..... 102 dB(A)
K_{WA} uncertainty .....3 dB

Wear ear-muffs.
The impact of noise can cause damage to hearing.

Total vibration values (vector sum of three directions) determined in accordance with EN 62841.

Handle
Vibration emission value a_h = 3.109 m/s^2
K uncertainty = 1.5 m/s^2

Additional handle
Vibration emission value a_h = 4.273 m/s^2
K uncertainty = 1.5 m/s^2

The specified vibration value was established in accordance with a standardized testing method. It may change according to how the electric equipment is used and may exceed the specified value in exceptional circumstances.

The specified vibration value can be used to compare the equipment with other electric power tools.

The specified vibration value can be used for initial assessment of a harmful effect.

Keep the noise emissions and vibrations to a minimum.
- Only use appliances which are in perfect working order.
- Service and clean the appliance regularly.
- Adapt your working style to suit the appliance.
- Do not overload the appliance.
- Have the appliance serviced whenever necessary.
- Switch the appliance off when it is not in use.
- Wear protective gloves.

Caution!
Residual risks
Even if you use this electric power tool in accordance with instructions, certain residual risks cannot be rules out. The following hazards may arise in connection with the equipment's construction and layout:
1. Lung damage if no suitable protective dust mask is used.
2. Damage to hearing if no suitable ear protection is used.
3. Health damage caused by hand-arm vibrations if the equipment is used over a prolonged period or is not properly guided and maintained.

5. Before starting the equipment

Before you connect the equipment to the mains supply make sure that the data on the rating plate are identical to the mains data.
Warning!
Always pull the power plug before making adjustments to the equipment.

5.1 Setting the cutting depth (Figure 2)
- Undo the locking screw for the sawing depth (4).
- Now adjust the sawing depth with the help of the scale for the sawing depth (5). Mark A indicates the sawing depth without the guide rail (not supplied) and B the sawing depth with the guide rail fitted.
- Tighten the locking screw (4) again. Check that everything is securely fastened.

Important!
The cutting area of the saw blade using the full sawing depth is indicated by the two marks on the plunge saw (23, Fig. 1b).

Anl_TE_PS_165_SPK9.indb 21 16.02.2018 09:56:21

5.2 Miter stop (Figure 3)
- The preset standard angle between the saw foot (7) and saw blade (13) is 90°. You can adjust this angle to carry out angled cuts.
- Release the locking lever for miter setting (8) on the front of the saw foot.
- You can now adjust the cutting angle to around 45°. Keep an eye on the cutting angle scale (10) as you do so.
- Refasten the locking lever for miter setting (8). Check the handle is securely fastened.

5.3 Extraction of dust and chips (Figure 4)
- Connect your plunge saw to a suitable vacuum cleaner using the connection for a dust extractor (15). This will ensure optimum dust extraction from the workpiece. The benefits are that you will protect both the equipment and your own health. Your work area will also be cleaner and safer.
- Dust created when working may be dangerous. Refer to the section entitled “Safety instructions”.
- Important! The vacuum cleaner you use for the extraction work must be suitable for the workpiece material.
- Check that all the parts are properly connected.

5.4 Parallel stop (Figure 5/6/7)
- The parallel stop (16) enables you to saw parallel lines.
- This means that you can cut along an edge (Fig. 6) or a wall (Fig. 7).
- To do so, slacken the locking screws for the parallel stop (9) which are in the soleplate (7) (see Fig. 5).
- To assemble, slide the parallel stop (16) into the guides (a) on the soleplate (7).
- To do so, insert the parallel stop into the plunge saw as shown in Fig. 6 or 7.
- Set the required distance and then tighten the locking screws for the parallel stop (9) again.
- Using the parallel stop: Position the parallel stop (16) flat on the edge of the workpiece and start sawing (Fig. 6/7).

Important! Carry out a trial cut in a piece of waste wood.

5.5 Line guide (Fig. 8)
- Using the line guide (20) you can carry out exact cuts following cutting lines marked on the workpiece.
- In this case the line guide indicates the two positions (a and b) of the saw blades. The first position (a) is for cuts with a sawing setting of 0°/90°. The second position (b) is for 45° cuts.
- For information on the angle setting see 5.2.

Important! Carry out a trial cut in a piece of waste wood.

6. Operation

6.1 Working with the plunge saw
- Always hold the plunge saw firmly.
- Do not use force! Push forwards gently and evenly with the plunge saw.
- The waste piece should be on the right-hand side of the plunge saw so that the wide section of the support bench supports its full area.
- If you are sawing down a line that has been drawn, guide the plunge saw along the corresponding guide (see 5.5).
- Clamp small pieces of wood securely before sawing them. Never hold them with your hand.
- Always follow the safety instructions. Wear safety goggles.
- Do not use defective saw blades or blades that are cracked or broken.
- Do not use any flanges / flange nuts whose bore hole is larger or smaller than those in the saw blade.
- The saw blade must not be decelerated by hand or by applying lateral pressure to the blade.
- Before you use the machine, make sure that the safety equipment such as the flanges and adjustment devices are in working order and are correctly adjusted and secured.

Caution! Always pull out the power plug before doing any work on the plunge saw!

Anl_TE_PS_165_SPK9.indb 22 16.02.2018 09:56:21

6.2 Using the plunge saw

- Adjust the cutting depth, cutting angle and parallel stop (see section 5.1, 5.2 and 5.4)
- Make sure that the On/Off switch (2) is not depressed. Only then should you insert the power plug into a suitable socket outlet.
- Do not switch on the plunge saw until you have fitted a saw blade.
- Place the soleplate on the workpiece you want to saw. The saw blade must not be in contact with the workpiece.
- Hold the plunge saw firmly with both hands.

6.3 Switching On/Off (Fig. 9)

Switching on:
Slide the locking button (3) up and then press the On/Off switch (2).

- Allow the saw blade to accelerate until it reaches full speed. Then slowly move the saw blade along the cutting line. Only exert gentle pressure on the saw blade as you do so.

To switch off:
Release the locking button and ON/OFF switch

- If you release the handle the equipment will shut down automatically which means that it cannot operate accidentally.
- Ensure that you do not cover or block the ventilation openings whilst working with the tool.
- Do not slow down the saw blade after you switch it off by pressing it sideways.
- Important! Do not put down the machine until the saw blade has reached a complete standstill.

Important. Carry out a trial cut in a piece of waste wood

6.4 Changing the saw blade (Fig. 10-14)
Caution! Always pull out the power plug before doing any work on the plunge saw!

Use only saw blades which comply with standard EN 847-1 and are of the same type as the saw blade supplied with this circular saw. Ask your dealer for advice.

Use the saw blade key (14) supplied to change the saw blade. The saw blade key (14) is stored in the housing. If required, pull the saw blade key (14) out of the housing (see Figure 10).

Caution! The plunge saw must not be operated with the saw blade key (14) inserted in it.

- Set the sawing depth to the maximum possible value (see section 5.1)
- Slide the blade lock for changing the saw blade (21) fully forward (Fig. 11).
- Slide the locking button for the On/Off switch (3) up and press the handle down until you hear it click into place (Fig. 11). The saw blade will now remain in this position automatically.
- Now press the spindle lock (12) (Fig. 12).
- Remove the screw for securing the saw blade (17) using the saw blade key (14) (Fig. 13).
- Now remove the flange (18) and the saw blade (13) (Fig. 14).
- Clean the flange and fit the new saw blade. Make sure that the direction of rotation is correct when doing so (see the arrows on the saw blade and guard hood)!
- Tighten the screw for securing the saw blade (17) and check that the blade runs true.
- Now slide the blade lock for changing the saw blade (21) fully back. The saw blade will go down behind the guard hood (19) again.
- Before you press the On/Off switch, make sure that the saw blade is correctly fitted and that moving parts run smoothly and the clamping screws are tightened securely.

7. Replacing the power cable

Danger!
If the power cable for this equipment is damaged, it must be replaced by the manufacturer or its after-sales service or similarly trained personnel to avoid danger.

Anl_TE_PS_165_SPK9.indb 23 16.02.2018 09:56:21

8. Cleaning, maintenance and ordering of spare parts

Danger!
Always pull out the mains power plug before starting any cleaning work.

8.1 Cleaning

- Keep all safety devices, air vents and the motor housing free of dirt and dust as far as possible. Wipe the equipment with a clean cloth or blow it with compressed air at low pressure.
- We recommend that you clean the device immediately each time you have finished using it.
- Clean the equipment regularly with a moist cloth and some soft soap. Do not use cleaning agents or solvents; these could attack the plastic parts of the equipment. Ensure that no water can seep into the device. The ingress of water into an electric tool increases the risk of an electric shock.

8.2 Carbon brushes
In case of excessive sparking, have the carbon brushes checked only by a qualified electrician.
Danger! The carbon brushes should not be rep laced by anyone but a qualified electrician.

8.3 Maintenance
There are no parts inside the equipment which require additional maintenance.

8.4 Ordering replacement parts:
Please quote the following data when ordering replacement parts:

- Type of machine
- Article number of the machine
- Identification number of the machine
- Replacement part number of the part required

For our latest prices and information please go to www.isc-gmbh.info

9. Disposal and recycling

The equipment is supplied in packaging to prevent it from being damaged in transit. The raw materials in this packaging can be reused or recycled. The equipment and its accessories are made of various types of material, such as metal and plastic. Never place defective equipment in your household refuse. The equipment should be taken to a suitable collection center for proper disposal. If you do not know the whereabouts of such a collection point, you should ask in your local council offices.

10. Storage

Store the equipment and accessories in a dark and dry place at above freezing temperature. The ideal storage temperature is between 5 and 30 °C. Store the electric tool in its original packaging.

Anl_TE_PS_165_SPK9.indb 24 16.02.2018 09:56:22



For EU countries only

Never place any electric power tools in your household refuse.

To comply with European Directive 2012/19/EC concerning old electric and electronic equipment and its implementation in national laws, old electric power tools have to be separated from other waste and disposed of in an environment-friendly fashion, e.g. by taking to a recycling depot.

Recycling alternative to the return request:
As an alternative to returning the equipment to the manufacturer, the owner of the electrical equipment must make sure that the equipment is properly disposed of if he no longer wants to keep the equipment. The old equipment can be returned to a suitable collection point that will dispose of the equipment in accordance with the national recycling and waste disposal regulations. This does not apply to any accessories or aids without electrical components supplied with the old equipment.

The reprinting or reproduction by any other means, in whole or in part, of documentation and papers accompanying products is permitted only with the express consent of the iSC GmbH.

Subject to technical changes

Anl_TE_PS_165_SPK9.indb 25 16.02.2018 09:56:22

Service information

We have competent service partners in all countries named on the guarantee certificate whose contact details can also be found on the guarantee certificate. These partners will help you with all service requests such as repairs, spare and wearing part orders or the purchase of consumables.

Please note that the following parts of this product are subject to normal or natural wear and that the following parts are therefore also required for use as consumables.

Category	Example
Wear parts*	Carbon brushes
Consumables*	Saw blade
Missing parts	

* Not necessarily included in the scope of delivery!

In the effect of defects or faults, please register the problem on the internet at www.isc-gmbh.info. Please ensure that you provide a precise description of the problem and answer the following questions in all cases:

- Did the equipment work at all or was it defective from the beginning?
- Did you notice anything (symptom or defect) prior to the failure?
- What malfunction does the equipment have in your opinion (main symptom)? Describe this malfunction.

Anl_TE_PS_165_SPK9.indb 26 16.02.2018 09:56:22

Warranty certificate

Dear Customer,
All of our products undergo strict quality checks to ensure that they reach you in perfect condition. In the unlikely event that your device develops a fault, please contact our service department at the address shown on this guarantee card. You can also contact us by telephone using the service number shown. Please note the following terms under which guarantee claims can be made:

1. These guarantee terms apply to consumers only, i.e. natural persons intending to use this product neither for their commercial activities nor for any other self-employed activities. These warranty terms regulate additional warranty services, which the manufacturer mentioned below promises to buyers of its new products in addition to their statutory rights of guarantee. Your statutory guarantee claims are not affected by this guarantee. Our guarantee is free of charge to you.
2. The warranty services cover only defects due to material or manufacturing faults on a product which you have bought from the manufacturer mentioned below and are limited to either the rectification of said defects on the product or the replacement of the product, whichever we prefer.
   Please note that our devices are not designed for use in commercial, trade or professional applications. A guarantee contract will not be created if the device has been used by commercial, trade or industrial business or has been exposed to similar stresses during the guarantee period.
3. The following are not covered by our guarantee:
   - Damage to the device caused by a failure to follow the assembly instructions or due to incorrect installation, a failure to follow the operating instructions (for example connecting it to an incorrect mains voltage or current type) or a failure to follow the maintenance and safety instructions or by exposing the device to abnormal environmental conditions or by lack of care and maintenance.
   - Damage to the device caused by abuse or incorrect use (for example overloading the device or the use or unapproved tools or accessories), ingress of foreign bodies into the device (such as sand, stones or dust, transport damage), the use of force or damage caused by external forces (for example by dropping it).
   - Damage to the device or parts of the device caused by normal or natural wear or tear or by normal use of the device.
4. The guarantee is valid for a period of 24 months starting from the purchase date of the device. Guarantee claims should be submitted before the end of the guarantee period within two weeks of the defect being noticed. No guarantee claims will be accepted after the end of the guarantee period. The original guarantee period remains applicable to the device even if repairs are carried out or parts are replaced. In such cases, the work performed or parts fitted will not result in an extension of the guarantee period, and no new guarantee will become active for the work performed or parts fitted. This also applies if an on-site service is used.
5. To make a claim under the guarantee, please register the defective device at: www.isc-gmbh.info. Please keep your bill of purchase or other proof of purchase for the new device. Devices that are returned without proof of purchase or without a rating plate shall not be covered by the guarantee, because appropriate identification will not be possible. If the defect is covered by our guarantee, then the item in question will either be repaired immediately and returned to you or we will send you a new replacement.

Of course, we are also happy offer a chargeable repair service for any defects which are not covered by the scope of this guarantee or for units which are no longer covered. To take advantage of this service, please send the device to our service address.

Also refer to the restrictions of this warranty concerning wear parts, consumables and missing parts as set out in the service information in these operating instructions.

Anl_TE_PS_165_SPK9.indb 27 16.02.2018 09:56:22