EN	Cordless Metal Cutter	INSTRUCTION MANUAL	5
SV	Batteridriven metallsåg	BRUKSANVISNING	13
NO	Batteridrevet metallsag	BRUKSANVISNING	21
FI	Akkutoiminen metallileikkuri	KÄYTTÖOHJE	29
LV	Metāla griezējs bez strāvas pievada	LIETOŠANAS INSTRUKCIJA	37
LT	Bevielis metalo pjaustytuvas	NAUDOJIMO INSTRUKCIJA	45
ET	Juhtmeta metallilõikur	KASUTUSJUHEND	53
RU	Аккумуляторная Пила По Металлу	РУКОВОДСТВО ПО ЭКСПЛУАТАЦИИ	61

DCS553

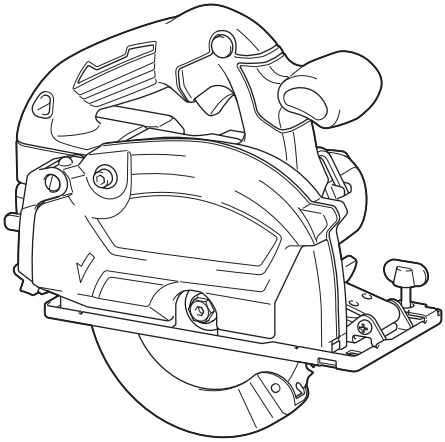

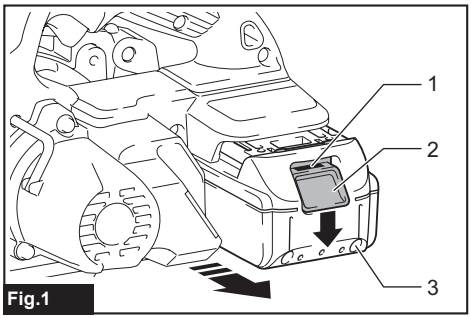

Fig.1

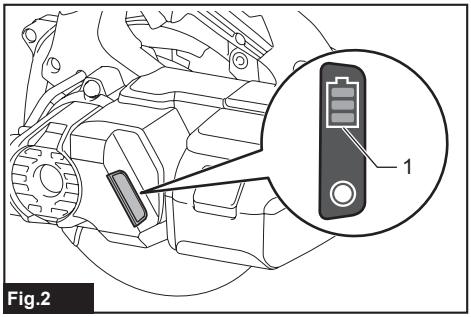

Fig.2

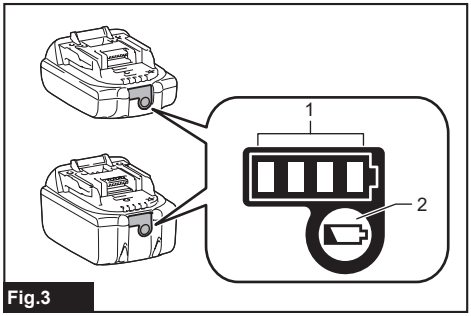

Fig.3

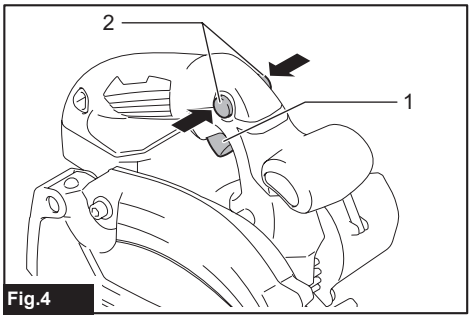

Fig.4

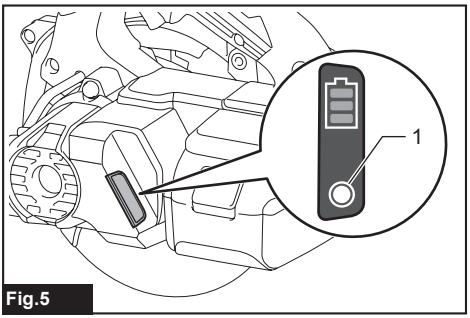

Fig.5

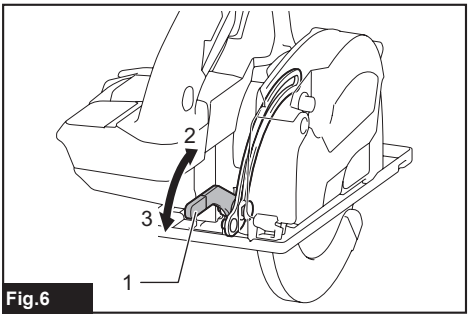

Fig.6

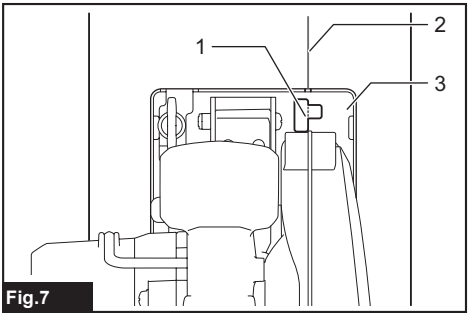

Fig.7

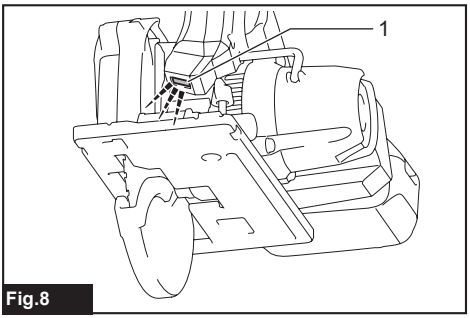

Fig.8

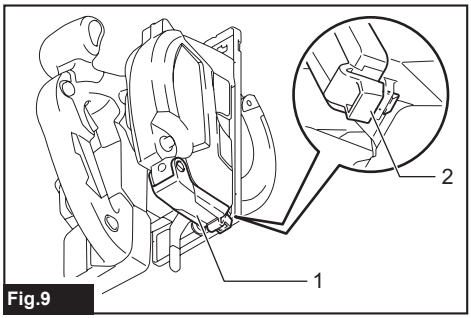

Fig.9

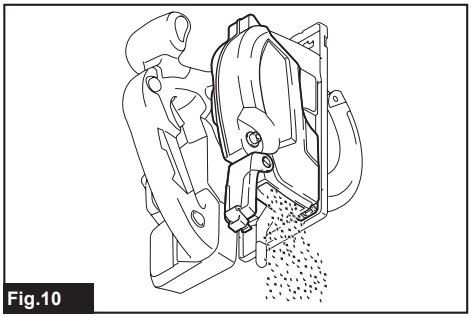
Fig.10

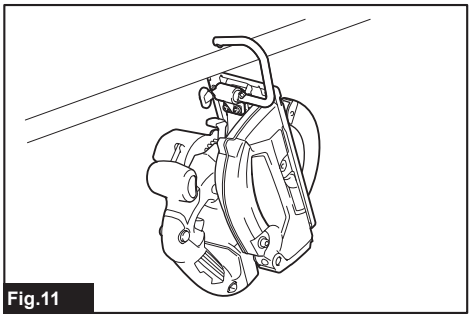
Fig.11

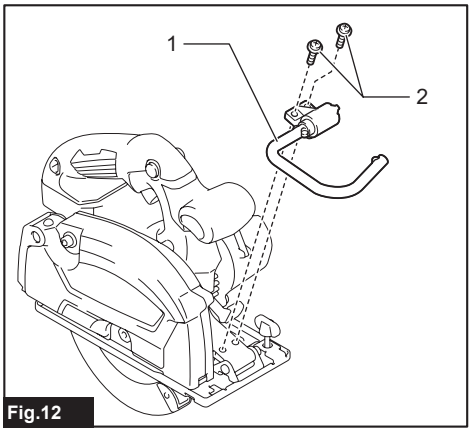

Fig.12

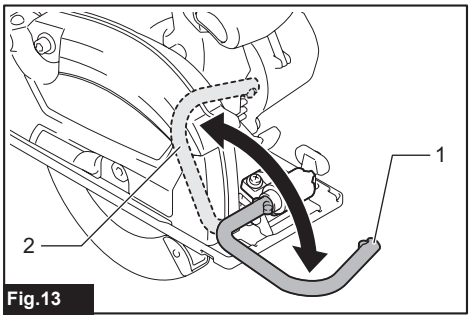

Fig.13

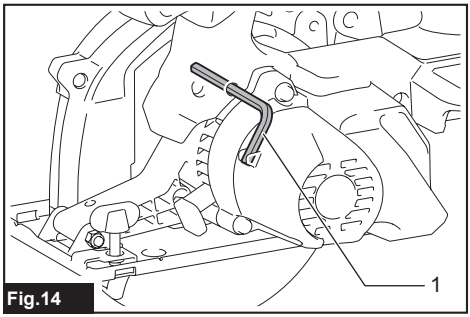

Fig.14

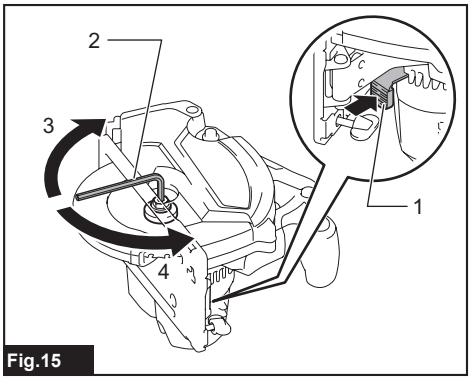

Fig.15

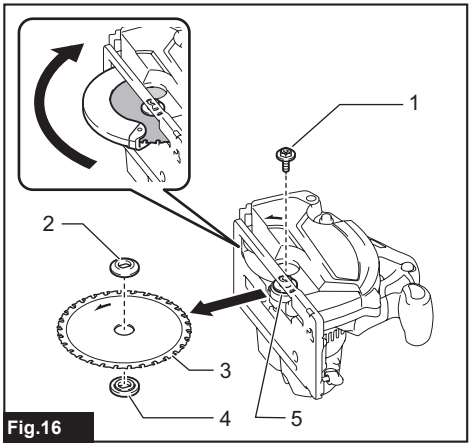

Fig.16

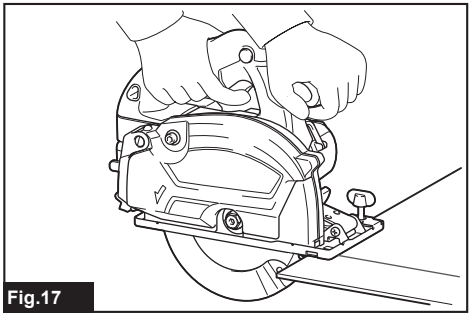
Fig.17

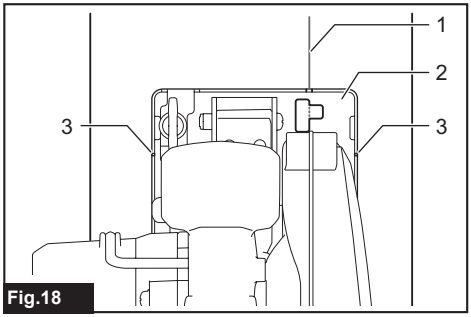

Fig.18

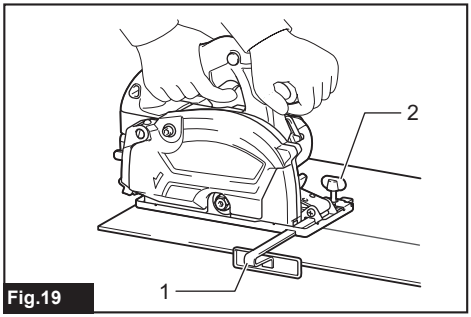

Fig.19

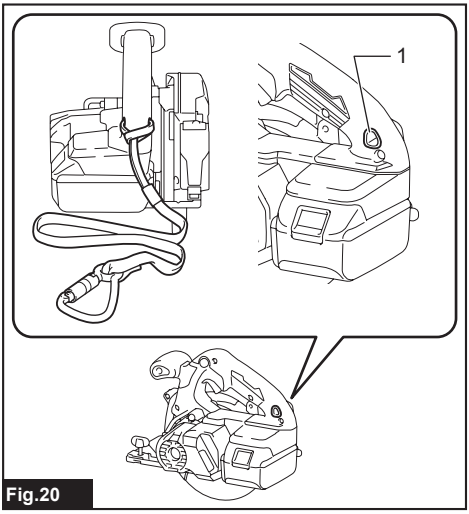

Fig.20

SPECIFICATIONS

Model:	DCS553
Blade diameter	136 mm - 150 mm
Max. Cutting depth (with 150 mm diameter blade)	57.5 mm
No load speed	4,200 min^{-1}
Rated voltage	D.C. 18 V
Overall length	267 mm
Net weight	2.7 - 3.0 kg

- Due to our continuing program of research and development, the specifications herein are subject to change without notice.
- Specifications may differ from country to country.
- The weight may differ depending on the attachment(s), including the battery cartridge. The lightest and heaviest combination, according to EPTA-Procedure 01/2014, are shown in the table.

Applicable battery cartridge and charger

Battery cartridge	BL1815N / BL1820 / BL1820B / BL1830 / BL1830B / BL1840 / BL1840B / BL1850 / BL1850B / BL1860B
Charger	DC18RC / DC18RD / DC18RE / DC18SD / DC18SE / DC18SF

- Some of the battery cartridges and chargers listed above may not be available depending on your region of residence.

⚠***WARNING:*** **Only use the battery cartridges and chargers listed above.** Use of any other battery cartridges and chargers may cause injury and/or fire.

Intended use

The tool is intended for cutting in mild steel.

Noise

The typical A-weighted noise level determined according to EN62841-2-5:
Sound pressure level (L_{pA}) : 103 dB(A)
Sound power level (L_{WA}) : 114 dB (A)
Uncertainty (K) : 3 dB(A)

⚠***WARNING:*** **Wear ear protection.**

Vibration

The vibration total value (tri-axial vector sum) determined according to EN62841-2-5:
Work mode: cutting metal
Vibration emission ($a_{h,M}$) : 2.5 m/s^2 or less
Uncertainty (K) : 1.5 m/s^2

NOTE: The declared vibration emission value has been measured in accordance with the standard test method and may be used for comparing one tool with another.

NOTE: The declared vibration emission value may also be used in a preliminary assessment of exposure.

⚠***WARNING:*** The vibration emission during actual use of the power tool can differ from the declared emission value depending on the ways in which the tool is used.

⚠***WARNING:*** Be sure to identify safety measures to protect the operator that are based on an estimation of exposure in the actual conditions of use (taking account of all parts of the operating cycle such as the times when the tool is switched off and when it is running idle in addition to the trigger time).

EC Declaration of Conformity

For European countries only

The EC declaration of conformity is included as Annex A to this instruction manual.

SAFETY WARNINGS

General power tool safety warnings

⚠***WARNING:*** **Read all safety warnings, instructions, illustrations and specifications provided with this power tool.** Failure to follow all instructions listed below may result in electric shock, fire and/or serious injury.

Save all warnings and instructions for future reference.

The term "power tool" in the warnings refers to your mains-operated (corded) power tool or battery-operated (cordless) power tool.

Cordless Metal Cutter safety warnings

Cutting procedures

1. **⚠DANGER: Keep hands away from cutting area and the blade. Keep your second hand on auxiliary handle, or motor housing.** If both hands are holding the saw, they cannot be cut by the blade.
2. **Do not reach underneath the workpiece.** The guard cannot protect you from the blade below the workpiece.
3. **Adjust the cutting depth to the thickness of the workpiece.** Less than a full tooth of the blade teeth should be visible below the workpiece.
4. **Never hold the workpiece in your hands or across your leg while cutting. Secure the workpiece to a stable platform.** It is important to support the work properly to minimise body exposure, blade binding, or loss of control.
5. **Hold the power tool by insulated gripping surfaces, when performing an operation where the cutting tool may contact hidden wiring.** Contact with a “live” wire will also make exposed metal parts of the power tool “live” and could give the operator an electric shock.
6. **When ripping, always use a rip fence or straight edge guide.** This improves the accuracy of cut and reduces the chance of blade binding.
7. **Always use blades with correct size and shape (diamond versus round) of arbour holes.** Blades that do not match the mounting hardware of the saw will run off-centre, causing loss of control.
8. **Never use damaged or incorrect blade washers or bolt.** The blade washers and bolt were specially designed for your saw, for optimum performance and safety of operation.

Kickback causes and related warnings

— kickback is a sudden reaction to a pinched, jammed or misaligned saw blade, causing an uncontrolled saw to lift up and out of the workpiece toward the operator;

— when the blade is pinched or jammed tightly by the kerf closing down, the blade stalls and the motor reaction drives the unit rapidly back toward the operator;

— if the blade becomes twisted or misaligned in the cut, the teeth at the back edge of the blade can dig into the top surface of the workpiece causing the blade to climb out of the kerf and jump back toward the operator.

Kickback is the result of saw misuse and/or incorrect operating procedures or conditions and can be avoided by taking proper precautions as given below.

1. **Maintain a firm grip with both hands on the saw and position your arms to resist kickback forces. Position your body to either side of the blade, but not in line with the blade.** Kickback could cause the saw to jump backwards, but kickback forces can be controlled by the operator, if proper precautions are taken.
2. **When blade is binding, or when interrupting a cut for any reason, release the trigger and hold the saw motionless in the material until the blade comes to a complete stop. Never attempt to remove the saw from the work or pull the saw backward while the blade is in motion or kickback may occur.** Investigate and take corrective actions to eliminate the cause of blade binding.
3. **When restarting a saw in the workpiece, centre the saw blade in the kerf so that the saw teeth are not engaged into the material.** If a saw blade binds, it may walk up or kickback from the workpiece as the saw is restarted.
4. **Support large panels to minimise the risk of blade pinching and kickback.** Large panels tend to sag under their own weight. Supports must be placed under the panel on both sides, near the line of cut and near the edge of the panel.
5. **Do not use dull or damaged blades.** Unsharpened or improperly set blades produce narrow kerf causing excessive friction, blade binding and kickback.
6. **Blade depth and bevel adjusting locking levers must be tight and secure before making the cut.** If blade adjustment shifts while cutting, it may cause binding and kickback.
7. **Use extra caution when sawing into existing walls or other blind areas.** The protruding blade may cut objects that can cause kickback.
8. **ALWAYS hold the tool firmly with both hands. NEVER place your hand, leg or any part of your body under the tool base or behind the saw, especially when making cross-cuts.** If kickback occurs, the saw could easily jump backwards over your hand, leading to serious personal injury.
9. **Never force the saw. Push the saw forward at a speed so that the blade cuts without slowing.** Forcing the saw can cause uneven cuts, loss of accuracy, and possible kickback.

Lower guard function

1. **Check the lower guard for proper closing before each use. Do not operate the saw if the lower guard does not move freely and close instantly. Never clamp or tie the lower guard into the open position.** If the saw is accidentally dropped, the lower guard may be bent. Raise the lower guard with the retracting handle and make sure it moves freely and does not touch the blade or any other part, in all angles and depths of cut.
2. **Check the operation of the lower guard spring. If the guard and the spring are not operating properly, they must be serviced before use.** Lower guard may operate sluggishly due to damaged parts, gummy deposits, or a build-up of debris.
3. **The lower guard may be retracted manually only for special cuts such as “plunge cuts” and “compound cuts”. Raise the lower guard by the retracting handle and as soon as the blade enters the material, the lower guard must be released.** For all other sawing, the lower guard should operate automatically.
4. **Always observe that the lower guard is covering the blade before placing the saw down on bench or floor.** An unprotected, coasting blade will cause the saw to walk backwards, cutting whatever is in its path. Be aware of the time it takes for the blade to stop after switch is released.

5. **To check lower guard, open lower guard by hand, then release and watch guard closure. Also check to see that retracting handle does not touch tool housing.** Leaving blade exposed is VERY DANGEROUS and can lead to serious personal injury.

Additional safety warnings

1. **Do not stop the blades by lateral pressure on the saw blade.**
2. **DANGER:**
   Do not attempt to remove cut material when blade is moving.
   CAUTION: Blades coast after turn off.
3. **Place the wider portion of the saw base on that part of the workpiece which is solidly supported, not on the section that will fall off when the cut is made. If the workpiece is short or small, clamp it down. DO NOT TRY TO HOLD SHORT PIECES BY HAND!**
4. **Never attempt to make a cut with the tool held upside down in a vise. This is extremely dangerous and can lead to serious accidents.**
5. **Wear safety goggles and hearing protection during operation.**
6. **Do not use any abrasive wheels.**
7. **Only use the saw blade with the diameter that is marked on the tool or specified in the manual.** Use of an incorrectly sized blade may affect the proper guarding of the blade or guard operation which could result in serious personal injury.
8. **Always use the saw blade intended for cutting the material that you are going to cut.**
9. **Only use the saw blades that are marked with a speed equal or higher than the speed marked on the tool.**

SAVE THESE INSTRUCTIONS.

⚠***WARNING:*** **DO NOT let comfort or familiarity with product (gained from repeated use) replace strict adherence to safety rules for the subject product. MISUSE or failure to follow the safety rules stated in this instruction manual may cause serious personal injury.**

Important safety instructions for battery cartridge

1. **Before using battery cartridge, read all instructions and cautionary markings on (1) battery charger, (2) battery, and (3) product using battery.**
2. **Do not disassemble battery cartridge.**
3. **If operating time has become excessively shorter, stop operating immediately. It may result in a risk of overheating, possible burns and even an explosion.**
4. **If electrolyte gets into your eyes, rinse them out with clear water and seek medical attention right away. It may result in loss of your eyesight.**
5. **Do not short the battery cartridge:**
   (1) **Do not touch the terminals with any conductive material.**
   (2) **Avoid storing battery cartridge in a container with other metal objects such as nails, coins, etc.**
   (3) **Do not expose battery cartridge to water or rain.**

   A battery short can cause a large current flow, overheating, possible burns and even a breakdown.
6. **Do not store the tool and battery cartridge in locations where the temperature may reach or exceed 50 °C (122 °F).**
7. **Do not incinerate the battery cartridge even if it is severely damaged or is completely worn out. The battery cartridge can explode in a fire.**
8. **Be careful not to drop or strike battery.**
9. **Do not use a damaged battery.**
10. **The contained lithium-ion batteries are subject to the Dangerous Goods Legislation requirements.**
    For commercial transports e.g. by third parties, forwarding agents, special requirement on packaging and labeling must be observed.
    For preparation of the item being shipped, consulting an expert for hazardous material is required.
    Please also observe possibly more detailed national regulations.
    Tape or mask off open contacts and pack up the battery in such a manner that it cannot move around in the packaging.
11. **Follow your local regulations relating to disposal of battery.**
12. **Use the batteries only with the products specified by Makita.** Installing the batteries to non-compliant products may result in a fire, excessive heat, explosion, or leak of electrolyte.

SAVE THESE INSTRUCTIONS.

⚠***CAUTION:*** **Only use genuine Makita batteries.** Use of non-genuine Makita batteries, or batteries that have been altered, may result in the battery bursting causing fires, personal injury and damage. It will also void the Makita warranty for the Makita tool and charger.

Tips for maintaining maximum battery life

1. **Charge the battery cartridge before completely discharged. Always stop tool operation and charge the battery cartridge when you notice less tool power.**
2. **Never recharge a fully charged battery cartridge. Overcharging shortens the battery service life.**
3. **Charge the battery cartridge with room temperature at 10 °C - 40 °C (50 °F - 104 °F). Let a hot battery cartridge cool down before charging it.**
4. **Charge the battery cartridge if you do not use it for a long period (more than six months).**

FUNCTIONAL DESCRIPTION

***CAUTION:* Always be sure that the tool is switched off and the battery cartridge is removed before adjusting or checking function on the tool.**

Installing or removing battery cartridge

***CAUTION:* Always switch off the tool before installing or removing of the battery cartridge.**

***CAUTION:* Hold the tool and the battery cartridge firmly when installing or removing battery cartridge.** Failure to hold the tool and the battery cartridge firmly may cause them to slip off your hands and result in damage to the tool and battery cartridge and a personal injury.

► **Fig.1: 1.** Red indicator **2.** Button **3.** Battery cartridge

To remove the battery cartridge, slide it from the tool while sliding the button on the front of the cartridge.

To install the battery cartridge, align the tongue on the battery cartridge with the groove in the housing and slip it into place. Insert it all the way until it locks in place with a little click. If you can see the red indicator on the upper side of the button, it is not locked completely.

***CAUTION:* Always install the battery cartridge fully until the red indicator cannot be seen.** If not, it may accidentally fall out of the tool, causing injury to you or someone around you.

***CAUTION:* Do not install the battery cartridge forcibly.** If the cartridge does not slide in easily, it is not being inserted correctly.

Tool / battery protection system

The tool is equipped with a tool/battery protection system. This system automatically cuts off power to the motor to extend tool and battery life. The tool will automatically stop during operation if the tool or battery is placed under one of the following conditions.

Overload protection

When the tool/battery is operated in a manner that causes it to draw an abnormally high current, the tool automatically stops. In this situation, turn the tool off and stop the application that caused the tool to become overloaded. Then turn the tool on to restart.

Overheat protection

When the tool/battery is overheated, the tool stops automatically, and the battery indicator blink about 60 seconds. In this situation, let the tool cool down before turning the tool on again.

On	Blinking
	

Overdischarge protection

When the battery capacity becomes low, the tool stops automatically. If the product does not operate even when the switches are operated, remove the batteries from the tool and charge the batteries.

Releasing protection lock

When the protection system works repeatedly, the tool is locked and the battery indicator shows the following state.

Blinking	Off
	

In this situation, the tool does not start even if turning the tool off and on. To release the protection lock, remove the battery, set it to the battery charger and wait until the charging finishes.

Indicating the remaining battery capacity

When you pull the switch trigger, the battery indicator shows the remaining battery capacity.

► **Fig.2: 1.** Battery indicator

The remaining battery capacity is shown as the following table.

Battery indicator status			Remaining battery capacity
On	Off	Blinking	
			50% to 100%
			20% to 50%
			0% to 20%
			Charge the battery

Indicating the remaining battery capacity

Only for battery cartridges with the indicator
► **Fig.3: 1.** Indicator lamps **2.** Check button

Press the check button on the battery cartridge to indicate the remaining battery capacity. The indicator lamps light up for a few seconds.

Indicator lamps			Remaining capacity
Lighted	Off	Blinking	
■ ■ ■ ■			75% to 100%
■ ■ ■ □			50% to 75%
■ ■ □ □			25% to 50%
■ □ □ □			0% to 25%
◪ □ □ □			Charge the battery.
■ ■ □ □ ↑ ↓ □ □ ■ ■			The battery may have malfunctioned.

NOTE: Depending on the conditions of use and the ambient temperature, the indication may differ slightly from the actual capacity.

Switch action

⚠***WARNING:*** **Before installing the battery cartridge into the tool, always check to see that the switch trigger actuates properly and returns to the "OFF" position when released.**

⚠***WARNING:*** **NEVER defeat the lock-off button by taping down or some other means.** A switch with a negated lock-off button may result in unintentional operation and serious personal injury.

⚠***WARNING:*** **NEVER use the tool if it runs when you simply pull the switch trigger without pressing the lock-off button.** A switch in need of repair may result in unintentional operation and serious personal injury. Return tool to a Makita service center for proper repairs BEFORE further usage.

To prevent the switch trigger from being accidentally pulled, a lock-off button is provided. To start the tool, depress the lock-off button and pull the switch trigger. Release the switch trigger to stop.
► **Fig.4: 1.** Switch trigger **2.** Lock-off button

NOTICE: **Do not pull the switch trigger hard without pressing in the lock-off button.** This can cause switch breakage.

⚠***CAUTION:*** **The tool starts to brake the circular saw blade rotation immediately after you release the switch trigger. Hold the tool firmly to respond the reaction of the brake when releasing the switch trigger.** Sudden reaction can drop the tool off your hand and can cause a personal injury.

Automatic speed change function

This tool has "high speed mode" and "high torque mode". The tool automatically changes the operation mode depending on the work load. When the work load is low, the tool will run in the "high speed mode" for quicker cutting operation. When the work load is high, the tool will run in the "high torque mode" for powerful cutting operation.
► **Fig.5: 1.** Mode indicator

The mode indicator lights up in green when the tool is running in "high torque mode".
If the tool is operated with excessive load, the mode indicator will blink in green. The mode indicator stops blinking and then lights up or turns off if you reduce the load on the tool.

Mode indicator status			Operation mode
On	Off	Blinking	
○			High speed mode
●			High torque mode
◐			Overload alert

Adjusting depth of cut

⚠***CAUTION:*** **After adjusting the depth of cut, always tighten the lever securely.**

Loosen the lever and move the base up or down. At the desired depth of cut, secure the base by tightening the lever.
For cleaner, safer cuts, set cut depth so that no more than one blade tooth projects below workpiece. Using proper cut depth helps to reduce potential for dangerous KICKBACKS which can cause personal injury.
► **Fig.6: 1.** Lever **2.** Loosen **3.** Tighten

Sighting

Place the alignment line of the base on your intended cutting line on the workpiece.
► **Fig.7: 1.** Alignment line **2.** Cutting line **3.** Base

Lighting the lamp

⚠***CAUTION:*** **Do not look in the light or see the source of light directly.**

To turn on the lamp without running the tool, pull the switch trigger without pressing the lock-off button.
To turn on the lamp with the tool running, press and hold the lock-off button and pull the switch trigger.
The lamp goes out 10 seconds after releasing the switch trigger.
► **Fig.8: 1.** Lamp

NOTE: Use a dry cloth to wipe the dirt off the lens of the lamp. Be careful not to scratch the lens of lamp, or it may lower the illumination.

Dust box

⚠*CAUTION:* Do not touch saw dust and the dust box with bare hands immediately after the operation. They may be extremely hot and could burn your skin.

⚠*CAUTION:* Do not cut the material on which thinner, gasoline, grease, or other chemicals are applied. The saw dust of such materials can damage the dust box and result in breakage which can cause personal injury.

⚠*CAUTION:* Wear eye protection or goggle when emptying the dust box.

Saw dust is collected into the dust box. Periodically dump the saw dust in the dust box before it gets full. Push the lever on the dust box to open the lid. Dump the saw dust while the rear of the tool faces downward.
► **Fig.9: 1.** Lid **2.** Lever

► **Fig.10**

Hook

Optional accessory

⚠*CAUTION:* Always remove the battery when hanging the tool with the hook.

⚠*CAUTION:* Never hook the tool at high locations or on the surfaces where the tool may lose the balance and fall.

⚠*CAUTION:* Do not pull the tool downward when it is hooked.

⚠*CAUTION:* Always fold the hook when operating the tool.

The hook is convenient for hanging the tool temporarily.
► **Fig.11**

Attach the hook with the screws as illustrated.
► **Fig.12: 1.** Hook **2.** Screw

To use the hook, simply turn the hook until it snaps into the open position.
When not in use, always turn the hook until it snaps into the closed position.
► **Fig.13: 1.** Open position **2.** Closed position

Electric brake

This tool is equipped with an electric blade brake. If the tool consistently fails to quickly stop the circular saw blade after switch lever release, have tool serviced at a Makita service center.

⚠*CAUTION:* The blade brake system is not a substitute for blade guard. NEVER USE TOOL WITHOUT A FUNCTIONING BLADE GUARD. SERIOUS PERSONAL INJURY CAN RESULT.

ASSEMBLY

⚠*CAUTION:* Always be sure that the tool is switched off and the battery cartridge is removed before carrying out any work on the tool.

Hex wrench storage

When not in use, store the hex wrench as shown in the figure to keep it from being lost.
► **Fig.14: 1.** Hex wrench

Installing or removing the circular saw blade

⚠*CAUTION:* Use only the Makita wrench to install or remove the circular saw blade.

⚠*CAUTION:* When installing the circular saw blade, be sure to tighten the bolt securely.

⚠*CAUTION:* Be sure the circular saw blade is installed with teeth pointing up at the front of the tool.

► **Fig.15: 1.** Shaft lock **2.** Hex wrench **3.** Tighten **4.** Loosen

To remove the circular saw blade, press the shaft lock fully so that the circular saw blade cannot revolve and use the hex wrench to loosen the hex bolt. Then remove the hex bolt, outer flange and circular saw blade.
► **Fig.16: 1.** Hex bolt **2.** Outer flange **3.** Circular saw blade **4.** Inner flange **5.** Cup washer

To install the circular saw blade, follow the removal procedure in reverse.

⚠*WARNING:* BE SURE TO TIGHTEN THE HEX BOLT SECURELY. Also be careful not to tighten the bolt forcibly. Slipping your hand from the hex wrench can cause a personal injury.

⚠*WARNING:* If the inner flange is removed, be sure to install it on the spindle. When installing, choose a correct side on which protrusion fits into the circular saw blade hole perfectly. Mounting the circular saw blade on the wrong side can result in the dangerous vibration.

Blade guard cleaning

When changing the circular saw blade, make sure to also clean the upper and lower guards of accumulated metal chips as discussed in the Maintenance section. Such efforts do not replace the need to check lower guard operation before each use.

OPERATION

⚠***CAUTION:*** **Always wear eye protection or goggle before operation.**

⚠***CAUTION:*** **Be sure to move the tool forward in a straight line gently.** Forcing or twisting the tool will result in overheating the motor and dangerous kickback, possibly causing severe injury.

⚠***CAUTION:*** **Never twist or force the tool in the cut.** This may cause motor overload and/or a dangerous kickback, resulting in serious injury to the operator.

⚠***CAUTION:*** **Always use the circular saw blades appropriate for your job.** The use of inappropriate circular saw blades may cause a poor cutting performance and/or present a risk of personal injury.

⚠***CAUTION:*** **Do not use a deformed or cracked circular saw blade. Replace it with a new one.**

► **Fig.17**

Hold the tool firmly. The tool is provided with both a front grip and rear handle. Use both to best grasp the tool. If both hands are holding the tool, they cannot be cut by the circular saw blade. Set the base on the workpiece to be cut without the circular saw blade making any contact. Then turn the tool on and wait until the circular saw blade attains full speed. Now simply move the tool forward over the workpiece surface, keeping it flat and advancing smoothly until the cutting is completed.
To get clean cuts, keep your cutting line straight and your speed of advance uniform. If the cut fails to properly follow your intended cut line, do not attempt to turn or force the tool back to the cut line. Doing so may bind the circular saw blade and lead to dangerous kickback and possible serious injury. Release switch, wait for the circular saw blade to stop and then withdraw tool. Realign tool on new cut line, and start cut again. Attempt to avoid positioning which exposes operator to chips and particles being ejected from the tool. Use eye protection to help avoid injury.

The sight grooves in the base makes it easy to check the distance between the front edge of the circular saw blade and the workpiece whenever the circular saw blade is set to the maximum depth of cut.
► **Fig.18: 1.** Cutting line **2.** Base **3.** Sight grooves

⚠***CAUTION:*** **Do not stack materials when cutting them.**

⚠***CAUTION:*** **Do not cut hardened steel, wood, plastics, concrete, tile, etc. Cut only mild steel, aluminum and stainless steel with a suitable circular saw blade.**

⚠***CAUTION:*** **Do not touch the circular saw blade, workpiece or cutting chips with bare hands immediately after cutting.** They may be extremely hot and could burn your skin.

⚠***CAUTION:*** **If the tool is operated continuously until the battery cartridge has discharged, allow the tool to rest for 15 minutes before proceeding with a fresh battery.**

Rip fence (Guide rule)

Optional accessory

⚠***CAUTION:*** **Make sure that the rip fence is securely installed in the correct position before use.** Improper attachment may cause dangerous kickback.

► **Fig.19: 1.** Rip fence (Guide rule) **2.** Clamping screw

The handy rip fence allows you to do extra-accurate straight cuts. Simply slide the rip fence up snugly against the side of the workpiece and secure it in position with the clamping screw on the front of the base. It also makes repeated cuts of uniform width possible.

Lanyard (tether strap) connection

⚠**Safety warnings specific for use at height**
Read all safety warnings and instructions. Failure to follow the warnings and instructions may result in serious injury.

1. **Always keep the tool tethered when working "at height". Maximum lanyard length is 2 m (6.5 ft).**
2. **Use only with lanyards appropriate for this tool type and rated for at least 4.0 kg (8.8 lbs).**
3. **Do not anchor the tool lanyard to anything on your body or on movable components. Anchor the tool lanyard to a rigid structure that can withstand the forces of a dropped tool.**
4. **Make sure the lanyard is properly secured at each end prior to use.**
5. **Inspect the tool and lanyard before each use for damage and proper function (including fabric and stitching). Do not use if damaged or not functioning properly.**
6. **Do not wrap lanyards around or allow them to come in contact with sharp or rough edges.**
7. **Fasten the other end of the lanyard outside the working area so that a falling tool is held securely.**
8. **Attach the lanyard so that the tool will move away from the operator if it falls.** Dropped tools will swing on the lanyard, which could cause injury or loss of balance.
9. **Do not use near moving parts or running machinery.** Failure to do so may result in a crush or entanglement hazard.
10. **Do not carry the tool by the attachment device or the lanyard.**
11. **Only transfer the tool between your hands while you are properly balanced.**
12. **Do not attach lanyards to the tool in a way that keeps guards, switches or lock-offs from operating properly.**
13. **Avoid getting tangled in the lanyard.**
14. **Keep lanyard away from the cutting area of the tool.**
15. **Use multi-action and screw gate type carabineers. Do not use single action spring clip carabineers.**
16. **In the event the tool is dropped, it must be tagged and removed from service, and should be inspected by a Makita Factory or Authorized Service Center.**

► **Fig.20: 1.** Hole for lanyard (tether strap)

MAINTENANCE

⚠***CAUTION:*** **Always be sure that the tool is switched off and the battery cartridge is removed before attempting to perform inspection or maintenance.**

⚠***CAUTION:*** **Clean out the upper and lower guards to ensure there is no accumulated metal chips which may impede the operation of the lower guarding system.** A dirty guarding system may limit the proper operation which could result in serious personal injury. **When using compressed air to blow metal chips out of the guards, wear a proper eye and breathing protection.**

⚠***CAUTION:*** **After each use, clean up the inside of the dust box and wipe off the saw dust on the tool.** Fine metallic dust may come inside the tool and cause malfunction or a fire.

NOTICE: **Never use gasoline, benzine, thinner, alcohol or the like. Discoloration, deformation or cracks may result.**

To maintain product SAFETY and RELIABILITY, repairs, any other maintenance or adjustment should be performed by Makita Authorized or Factory Service Centers, always using Makita replacement parts.

Inspecting the circular saw blade

- **Check the circular saw blade carefully for cracks or damage before and after each use. Replace a cracked or damaged circular saw blade immediately.**
- **Replace with a new circular saw blade as soon as it no longer cuts effectively.** Continuing to use a dull circular saw blade may cause a dangerous kickback and/or motor overload.
- **Circular saw blades for metal cutter cannot be re-sharpened.**

OPTIONAL ACCESSORIES

⚠***CAUTION:*** **These accessories or attachments are recommended for use with your Makita tool specified in this manual.** The use of any other accessories or attachments might present a risk of injury to persons. Only use accessory or attachment for its stated purpose.

If you need any assistance for more details regarding these accessories, ask your local Makita Service Center.

- Carbide-tipped circular saw blades
- Rip fence (Guide rule)
- Clamping screw
- Hook
- Hex wrench
- Safety goggles
- Makita genuine battery and charger

NOTE: Some items in the list may be included in the tool package as standard accessories. They may differ from country to country.