EN	Cordless Heat Gun	INSTRUCTION MANUAL	4
SV	Sladdlös varmluftspistol	BRUKSANVISNING	12
NO	Batteridrevet varmepistol	BRUKSANVISNING	20
FI	Langaton kuumailmapistooli	KÄYTTÖOHJE	28
DA	Akku varmepistol	BRUGSANVISNING	36
LV	Bezvadu karsēšanas pistole	LIETOŠANAS INSTRUKCIJA	44
LT	Akumuliatorinė orapūtė	NAUDOJIMO INSTRUKCIJA	53
ET	Juhtmevaba kuumaõhupüstol	KASUTUSJUHEND	61
RU	Аккумуляторный тепловой пистолет	РУКОВОДСТВО ПО ЭКСПЛУАТАЦИИ	69

DHG180
DHG181

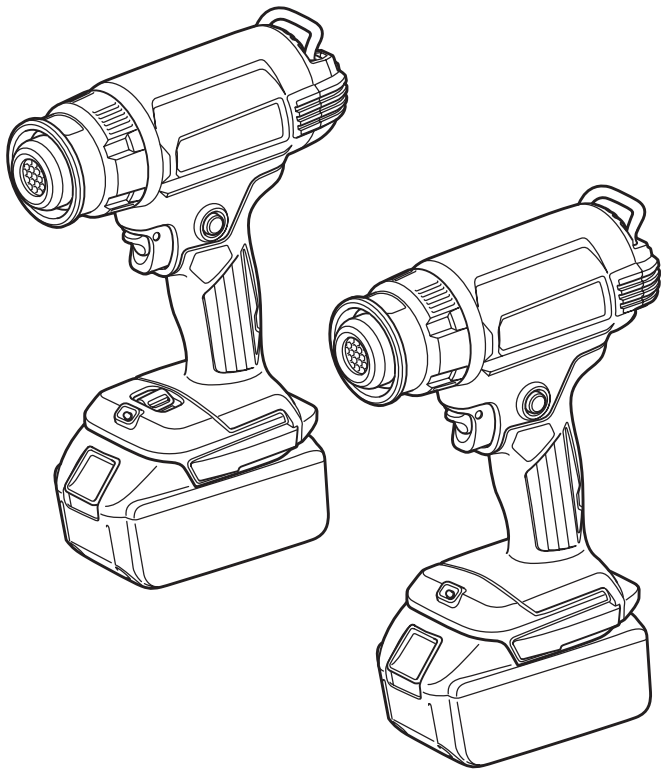

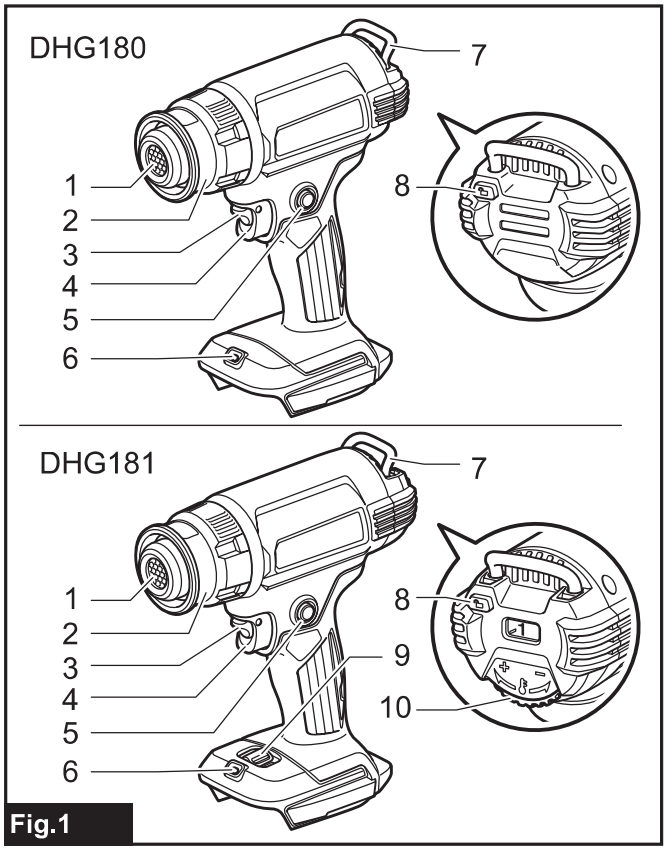

Fig.1

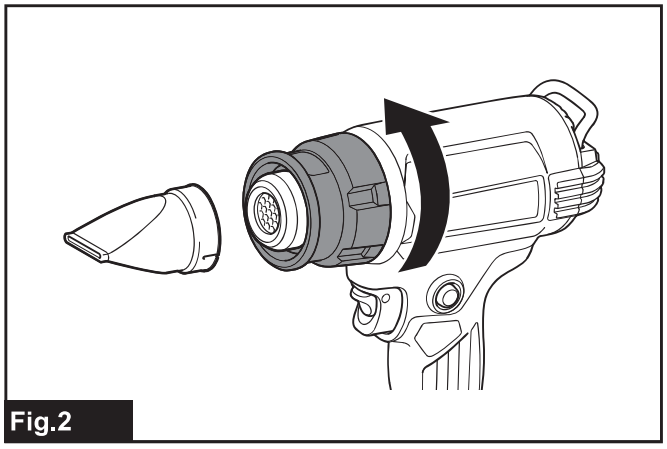
Fig.2

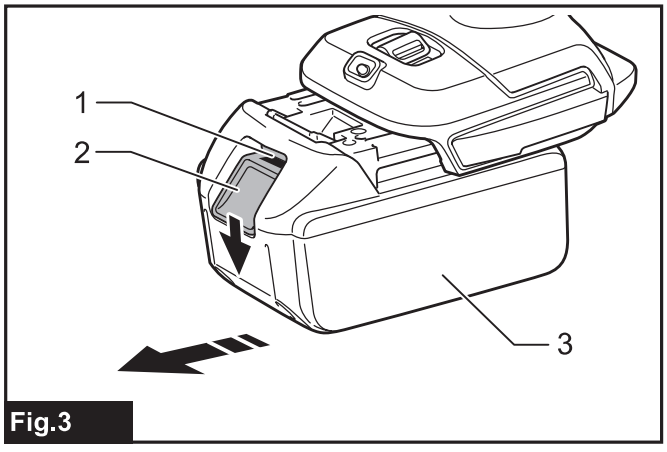

Fig.3

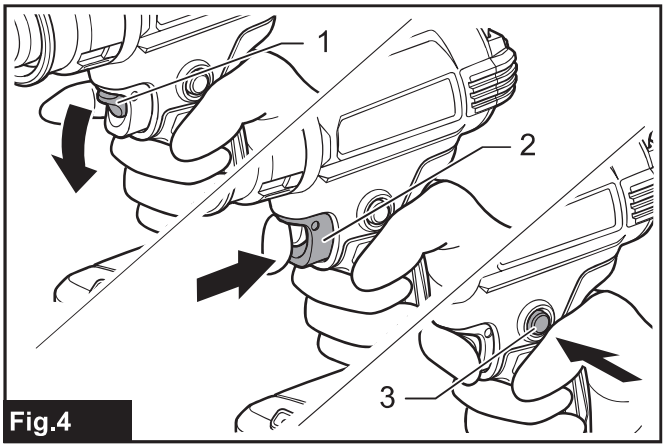

Fig.4

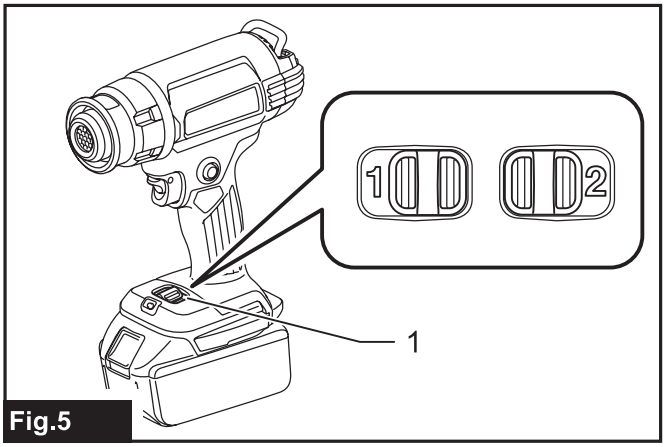

Fig.5

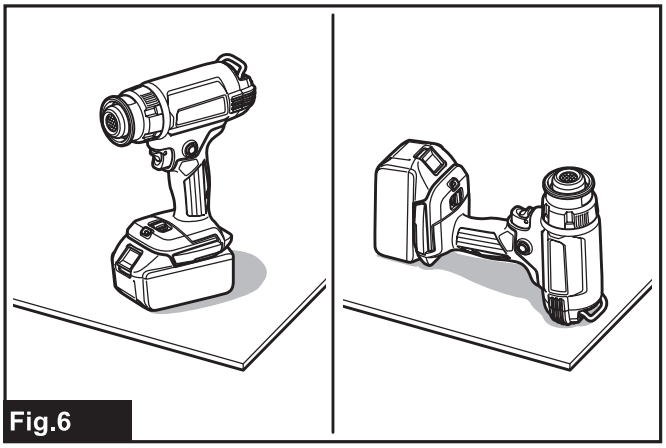
Fig.6

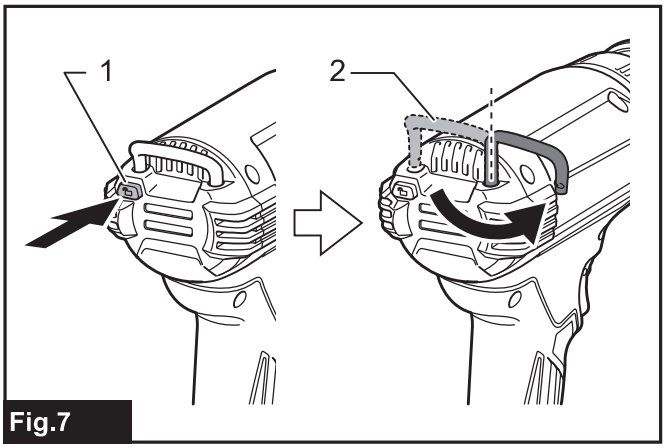

Fig.7

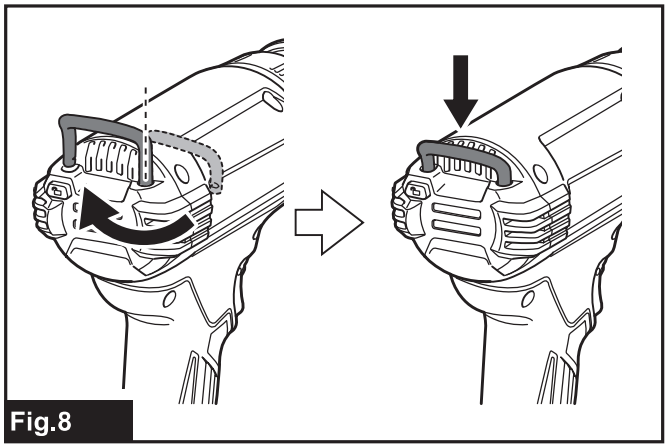

Fig.8

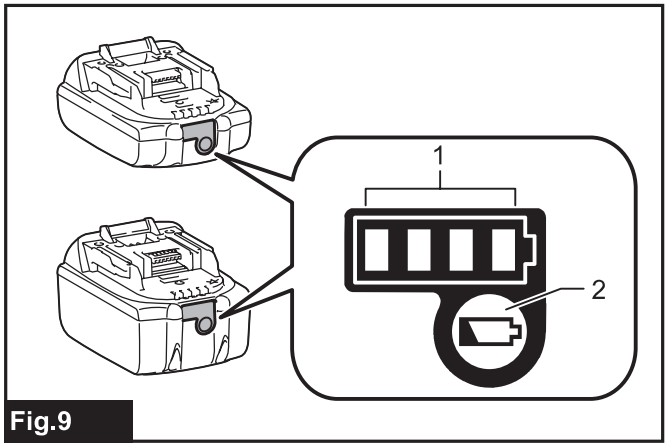

Fig.9

WARNING

- For users in Europe:
  This appliance can be used by children aged from 8 years and above and persons with reduced physical, or mental capabilities or lack of experience and knowledge if they have been given supervision concerning use of the appliance in a safety way and understand the hazards involved. Children shall not play with the appliance. Cleaning and user maintenance shall not be made by children without supervision.
- For users in areas other than Europe:
  This appliance is not intended for use by persons (including children) with reduced physical, sensory or mental capabilities, or lack of experience and knowledge, unless they have been given supervision or instruction concerning use of the appliance by a person responsible for their safety. Children should be supervised to ensure that they do not play with the appliance.
- **See the chapter "MAINTENANCE" for the appropriate details of precautions during user maintenance.**
- A fire may result if the appliance is not used with care, therefore
  - **be careful when using the appliance in places where there are combustible materials;**
  - **do not apply to the same place for a long time;**
  - **do not use in presence of an explosive atmosphere;**
  - **be aware that heat may be conducted to combustible materials that are out of sight;**
  - **place the appliance on its stand after use and allow it to cool down before storage;**
  - **do not leave the appliance unattended when it is switched on.**

This is a battery-operated appliance. The battery cartridge is charged while it is removed from the appliance.

- **See the chapter "SPECIFICATIONS" for the type reference of the battery.**
- **See the section "Installing or removing battery cartridge" for how to remove or install the battery.**
- **When disposing the battery cartridge, remove it from the appliance and dispose of it in a safe place. Follow your local regulations relating to disposal of battery.**
- **If the appliance is not used for a long period of time, the battery must be removed from the appliance.**
- **Do not short the battery cartridge.**

SPECIFICATIONS

Model:	**DHG180**	**DHG181**
Rated voltage	D.C. 18 V	
Temperature	550 °C	Ambient temperature - 550 °C
Air volume	200 L/min	1: 120 L/min 2: 200 L/min
Dimensions (L x W x H) with BL1860B	168 mm x 79 mm x 251 mm	173 mm x 79 mm x 255 mm
Net weight	1.0 - 1.3 kg	1.0 - 1.4 kg

- Due to our continuing program of research and development, the specifications herein are subject to change without notice.
- Specifications and battery cartridge may differ from country to country.
- The weight may differ depending on the attachment(s), including the battery cartridge. The lightest and heaviest combinations, according to EPTA-Procedure 01/2014, are shown in the table.

Applicable battery cartridge and charger

Battery cartridge	BL1815N / BL1820B / BL1830B / BL1840B / BL1850B / BL1860B
Charger	DC18RC / DC18RD / DC18RE / DC18SD / DC18SE / DC18SF / DC18SH

- Some of the battery cartridges and chargers listed above may not be available depending on your region of residence.

⚠ ***WARNING:*** **Only use the battery cartridges and chargers listed above.** Use of any other battery cartridges and chargers may cause injury and/or fire.

Symbols

The followings show the symbols which may be used for the equipment. Be sure that you understand their meaning before use.

	Warning
	Do not use in the rain or leave the heat gun outdoors while raining.
	Read instruction manual.
	Hot surfaces - Burns to fingers or hands.
 Ni-MH Li-ion	Only for EU countries Due to the presence of hazardous components in the equipment, waste electrical and electronic equipment, accumulators and batteries may have a negative impact on the environment and human health. Do not dispose of electrical and electronic appliances or batteries with household waste! In accordance with the European Directive on waste electrical and electronic equipment and on accumulators and batteries and waste accumulators and batteries, as well as their adaptation to national law, waste electrical equipment, batteries and accumulators should be stored separately and delivered to a separate collection point for municipal waste, operating in accordance with the regulations on environmental protection. This is indicated by the symbol of the crossed-out wheeled bin placed on the equipment.

Intended use

This cordless heat gun has been designed for various of heating applications such as heat shrinking of heat-shrinkable wrap or tubes, soldering or de-soldering electronic components, peeling-off self-adhesive tapes or stickers, loosen rusted nut or bolt, shaping plastic parts, drying, melting and unfreezing, etc.

SAFETY WARNINGS

General power tool safety warnings

WARNING: **Read all safety warnings, instructions, illustrations and specifications provided with this power tool.** Failure to follow all instructions listed below may result in electric shock, fire and/or serious injury.

Save all warnings and instructions for future reference.

The term "power tool" in the warnings refers to your mains-operated (corded) power tool or battery-operated (cordless) power tool.

Work area safety

1. **Keep work area clean and well lit.** Cluttered or dark areas invite accidents.
2. **Do not operate power tools in explosive atmospheres, such as in the presence of flammable liquids, gases or dust.** Power tools create sparks which may ignite the dust or fumes.
3. **Keep children and bystanders away while operating a power tool.** Distractions can cause you to lose control.

Electrical safety

1. **Power tool plugs must match the outlet. Never modify the plug in any way. Do not use any adapter plugs with earthed (grounded) power tools.** Unmodified plugs and matching outlets will reduce risk of electric shock.
2. **Avoid body contact with earthed or grounded surfaces, such as pipes, radiators, ranges and refrigerators.** There is an increased risk of electric shock if your body is earthed or grounded.
3. **Do not expose power tools to rain or wet conditions.** Water entering a power tool will increase the risk of electric shock.
4. **Do not abuse the cord. Never use the cord for carrying, pulling or unplugging the power tool. Keep cord away from heat, oil, sharp edges or moving parts.** Damaged or entangled cords increase the risk of electric shock.
5. **When operating a power tool outdoors, use an extension cord suitable for outdoor use.** Use of a cord suitable for outdoor use reduces the risk of electric shock.
6. **If operating a power tool in a damp location is unavoidable, use a residual current device (RCD) protected supply.** Use of an RCD reduces the risk of electric shock.
7. **Power tools can produce electromagnetic fields (EMF) that are not harmful to the user.** However, users of pacemakers and other similar medical devices should contact the maker of their device and/or doctor for advice before operating this power tool.

Personal safety

1. **Stay alert, watch what you are doing and use common sense when operating a power tool. Do not use a power tool while you are tired or under the influence of drugs, alcohol or medication.** A moment of inattention while operating power tools may result in serious personal injury.
2. **Use personal protective equipment. Always wear eye protection.** Protective equipment such as a dust mask, non-skid safety shoes, hard hat or hearing protection used for appropriate conditions will reduce personal injuries.
3. **Prevent unintentional starting. Ensure the switch is in the off-position before connecting to power source and/or battery pack, picking up or carrying the tool.** Carrying power tools with your finger on the switch or energising power tools that have the switch on invites accidents.
4. **Remove any adjusting key or wrench before turning the power tool on.** A wrench or a key left attached to a rotating part of the power tool may result in personal injury.

5. **Do not overreach. Keep proper footing and balance at all times.** This enables better control of the power tool in unexpected situations.
6. **Dress properly. Do not wear loose clothing or jewellery. Keep your hair and clothing away from moving parts.** Loose clothes, jewellery or long hair can be caught in moving parts.
7. **If devices are provided for the connection of dust extraction and collection facilities, ensure these are connected and properly used.** Use of dust collection can reduce dust-related hazards.
8. **Do not let familiarity gained from frequent use of tools allow you to become complacent and ignore tool safety principles.** A careless action can cause severe injury within a fraction of a second.
9. **Always wear protective goggles to protect your eyes from injury when using power tools. The goggles must comply with ANSI Z87.1 in the USA, EN 166 in Europe, or AS/NZS 1336 in Australia/New Zealand. In Australia/New Zealand, it is legally required to wear a face shield to protect your face, too.**

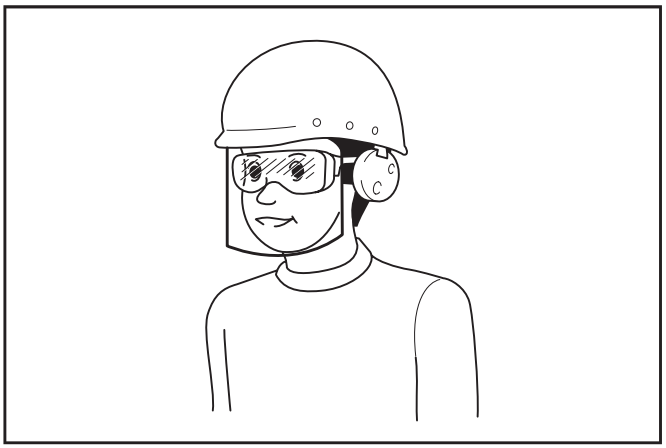

It is an employer's responsibility to enforce the use of appropriate safety protective equipments by the tool operators and by other persons in the immediate working area.

Power tool use and care

1. **Do not force the power tool. Use the correct power tool for your application.** The correct power tool will do the job better and safer at the rate for which it was designed.
2. **Do not use the power tool if the switch does not turn it on and off.** Any power tool that cannot be controlled with the switch is dangerous and must be repaired.
3. **Disconnect the plug from the power source and/or remove the battery pack, if detachable, from the power tool before making any adjustments, changing accessories, or storing power tools.** Such preventive safety measures reduce the risk of starting the power tool accidentally.
4. **Store idle power tools out of the reach of children and do not allow persons unfamiliar with the power tool or these instructions to operate the power tool.** Power tools are dangerous in the hands of untrained users.
5. **Maintain power tools and accessories. Check for misalignment or binding of moving parts, breakage of parts and any other condition that may affect the power tool's operation. If damaged, have the power tool repaired before use.** Many accidents are caused by poorly maintained power tools.
6. **Keep cutting tools sharp and clean.** Properly maintained cutting tools with sharp cutting edges are less likely to bind and are easier to control.
7. **Use the power tool, accessories and tool bits etc. in accordance with these instructions, taking into account the working conditions and the work to be performed.** Use of the power tool for operations different from those intended could result in a hazardous situation.
8. **Keep handles and grasping surfaces dry, clean and free from oil and grease.** Slippery handles and grasping surfaces do not allow for safe handling and control of the tool in unexpected situations.
9. **When using the tool, do not wear cloth work gloves which may be entangled.** The entanglement of cloth work gloves in the moving parts may result in personal injury.

Battery tool use and care

1. **Recharge only with the charger specified by the manufacturer.** A charger that is suitable for one type of battery pack may create a risk of fire when used with another battery pack.
2. **Use power tools only with specifically designated battery packs.** Use of any other battery packs may create a risk of injury and fire.
3. **When battery pack is not in use, keep it away from other metal objects, like paper clips, coins, keys, nails, screws or other small metal objects, that can make a connection from one terminal to another.** Shorting the battery terminals together may cause burns or a fire.
4. **Under abusive conditions, liquid may be ejected from the battery; avoid contact. If contact accidentally occurs, flush with water. If liquid contacts eyes, additionally seek medical help.** Liquid ejected from the battery may cause irritation or burns.
5. **Do not use a battery pack or tool that is damaged or modified.** Damaged or modified batteries may exhibit unpredictable behaviour resulting in fire, explosion or risk of injury.
6. **Do not expose a battery pack or tool to fire or excessive temperature.** Exposure to fire or temperature above 130 °C may cause explosion.
7. **Follow all charging instructions and do not charge the battery pack or tool outside the temperature range specified in the instructions.** Charging improperly or at temperatures outside the specified range may damage the battery and increase the risk of fire.

Service

1. **Have your power tool serviced by a qualified repair person using only identical replacement parts.** This will ensure that the safety of the power tool is maintained.
2. **Never service damaged battery packs.** Service of battery packs should only be performed by the manufacturer or authorized service providers.
3. **Follow instruction for lubricating and changing accessories.**

Cordless heat gun safety warnings

1. **Misuse of the heat gun could cause risk of fire.**
2. **Do not use this tool as a hair dryer.**
3. **Never leave the heat gun unattended when it is running.**
4. **Do not use the heat gun in humid, flammable, or explosive environment.**
5. **Check the work area before operation. Do not use the tool if safety is not confirmed.**
6. **Keep the work area sufficient air ventilation.** Poisonous smoke may be generated when working with some materials.
7. **While the heat gun is running or shortly after the heat gun is turned off, do not touch the nozzle or accessory attached to the nozzle as it has become very hot. Wait until the nozzle or accessory is cooled down completely.**
8. **Do not look down into the nozzle of the heat gun when it is running.**
9. **Do not allow the hot nozzle of the heat gun touch any object or material that is flammable or easily melted or damaged by heat when the heat gun is running or shortly after turning off.**
10. **When installing or removing the nozzle, allow the nozzle to cool sufficiently.**
11. **After use, allow the tool to stand on its own or place the heating nozzle upward before cooling.**
12. **Always turn off the heat gun, disconnect the power source and let it cool down completely before moving or storing.**
13. **Never obstruct the air inlet or air ventilation in any way.** Doing so could cause the heat gun extremely hot and damaged.
14. **Do not allow any object drop into the nozzle of the heat gun.** It may cause short circuit or over heat.
15. **Never point the heat gun towards any other persons or flammable objects.**
16. **Heat slowly while moving the heat gun up, down, left and right. Do not apply to the same place for a long time.**
17. **Clean the paint from the nozzle; it could ignite.**
18. **When using the tool with it stands on its own, put the tool on the stable position.**
19. **When using the tool with accessories, make sure that the accessories attached to the tool firmly.**
20. **Use Makita's genuine accessories.**
21. **Do not take the tool as a blower.**
22. **Indication: Battery is partially charged when delivered. The battery has to be fully charged to ensure the battery power before first time usage. Battery pack has to be removed from the tool for charging.**
23. **Battery can be charged at any time which will not shorten its lifetime. Any discontinue during charging will not damage the battery either.**

Important safety instructions for battery cartridge

1. **Before using battery cartridge, read all instructions and cautionary markings on (1) battery charger, (2) battery, and (3) product using battery.**
2. **Do not disassemble or tamper with the battery cartridge.** It may result in a fire, excessive heat, or explosion.
3. **If operating time has become excessively shorter, stop operating immediately. It may result in a risk of overheating, possible burns and even an explosion.**
4. **If electrolyte gets into your eyes, rinse them out with clear water and seek medical attention right away. It may result in loss of your eyesight.**
5. **Do not short the battery cartridge:**
   (1) **Do not touch the terminals with any conductive material.**
   (2) **Avoid storing battery cartridge in a container with other metal objects such as nails, coins, etc.**
   (3) **Do not expose battery cartridge to water or rain.**

   A battery short can cause a large current flow, overheating, possible burns and even a breakdown.
6. **Do not store and use the tool and battery cartridge in locations where the temperature may reach or exceed 50 °C (122 °F).**
7. **Do not incinerate the battery cartridge even if it is severely damaged or is completely worn out. The battery cartridge can explode in a fire.**
8. **Do not nail, cut, crush, throw, drop the battery cartridge, or hit against a hard object to the battery cartridge.** Such conduct may result in a fire, excessive heat, or explosion.
9. **Do not use a damaged battery.**
10. **The contained lithium-ion batteries are subject to the Dangerous Goods Legislation requirements.**
    For commercial transports e.g. by third parties, forwarding agents, special requirement on packaging and labeling must be observed.
    For preparation of the item being shipped, consulting an expert for hazardous material is required.
    Please also observe possibly more detailed national regulations.
    Tape or mask off open contacts and pack up the battery in such a manner that it cannot move around in the packaging.
11. **When disposing the battery cartridge, remove it from the tool and dispose of it in a safe place. Follow your local regulations relating to disposal of battery.**
12. **Use the batteries only with the products specified by Makita.** Installing the batteries to non-compliant products may result in a fire, excessive heat, explosion, or leak of electrolyte.
13. **If the tool is not used for a long period of time, the battery must be removed from the tool.**

14. **During and after use, the battery cartridge may take on heat which can cause burns or low temperature burns. Pay attention to the handling of hot battery cartridges.**
15. **Do not touch the terminal of the tool immediately after use as it may get hot enough to cause burns.**
16. **Do not allow chips, dust, or soil stuck into the terminals, holes, and grooves of the battery cartridge.** It may cause heating, catching fire, burst and malfunction of the tool or battery cartridge, resulting in burns or personal injury.
17. **Unless the tool supports the use near high-voltage electrical power lines, do not use the battery cartridge near high-voltage electrical power lines.** It may result in a malfunction or breakdown of the tool or battery cartridge.
18. **Keep the battery away from children.**

SAVE THESE INSTRUCTIONS.

⚠ ***CAUTION:*** **Only use genuine Makita batteries.** Use of non-genuine Makita batteries, or batteries that have been altered, may result in the battery bursting causing fires, personal injury and damage. It will also void the Makita warranty for the Makita tool and charger.

Tips for maintaining maximum battery life

1. **Charge the battery cartridge before completely discharged. Always stop tool operation and charge the battery cartridge when you notice less tool power.**
2. **Never recharge a fully charged battery cartridge. Overcharging shortens the battery service life.**
3. **Charge the battery cartridge with room temperature at 10 °C - 40 °C (50 °F - 104 °F). Let a hot battery cartridge cool down before charging it.**
4. **When not using the battery cartridge, remove it from the tool or the charger.**
5. **Charge the battery cartridge if you do not use it for a long period (more than six months).**

PACKAGE CONTENT LIST

Check that the items listed below are included in the package.

- 1 Cordless Heat gun
- 1 Set of accessories (Some accessories may not be necessary depending on your purpose.)
- 1 Instruction manual

NOTE: When parts are missing or damaged, please contact your dealer.

PARTS DESCRIPTION

► **Fig.1**

1	Heating nozzle	2	Front cover
3	Lock off lever	4	Switch trigger
5	Lock on button	6	LED light
7	Hook	8	Hook release button
9	Air volume switch (1/2)	10	Temperature dial

ASSEMBLY

Attaching and detaching accessories

The heat gun can use with accessory or without the accessories according to various of heating purpose.

Attaching the accessory

— Choose the appropriate nozzle according to the heating applications.
— Push the fitting end of the nozzle onto the heating nozzle.

MOUNTING THE CORRECT ACCESSORY (IF APPLICABLE)

Shape and description	Example
Glass protection nozzle Protect windows when stripping frames 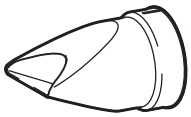	Drying the putty on the window flame Removing putty from the window frame with the scraper (optional accessory) 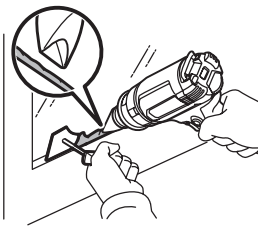
Wide-slot nozzle For heating spread over wider area 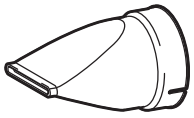	Heat packaging for heat shrink films 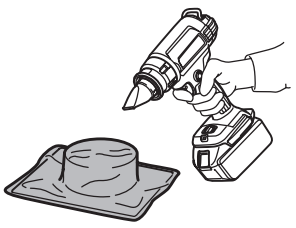
Reflector nozzle 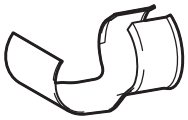	Heat shrinking for heat shrink tubes Bending of resin tube 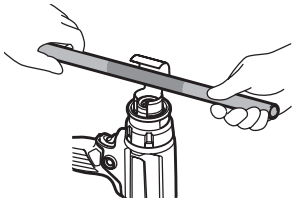

Shape and description	Example
Reduction nozzle For heating concentrated over small area 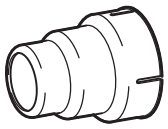	Paint stripping with the scraper (optional accessory) 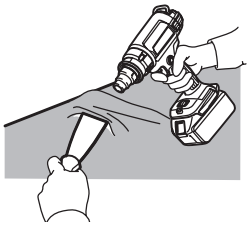
Overlap welding nozzle (*Optional accessory*) 	Patching a vinyl sheet with the pressure roller (optional accessory) 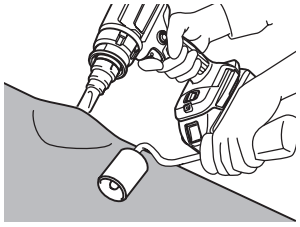
Solder sleeves reflector (*Optional accessory*) 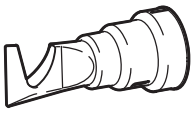	Heat shrinking for heat shrink tubes 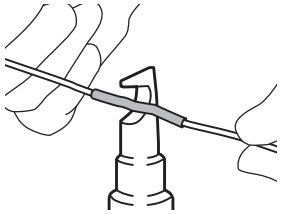
Welding nozzle (*Optional accessory*) 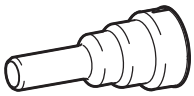	For heating concentrated over small area 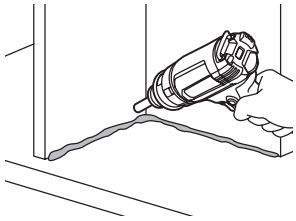

⚠*WARNING:* Ensure the power tool is switched off and battery cartridge is removed from the power tool before attaching the accessories. Attaching the accessories with switch on or battery cartridge attached may cause the risk of accidents.

⚠*WARNING:* Make sure to attach the accessories securely. Otherwise the accessory may fall off accidently and cause burn injury.

Detaching the accessory

Turn the front cover in the direction of the arrow in the illustration, the accessory will be ejected. This allows you to remove nozzles without touching them while they are still hot.

► **Fig.2**

⚠*WARNING:* Do not touch the accessory attached to or ejected from the heat gun immediately after use. Do not eject the accessory to any person or animal. The nozzle attachment gets extremely hot after use and cause risk burn injury.

⚠*WARNING:* Do not eject the accessory to any surface that is flammable or easy to be melt. The nozzle attachment gets extremely hot after use and cause risk of fire or melting the surface.

⚠*WARNING:* Use the identical accessories included in the original package or serviced by the dealer or service center. Use wrong or defective accessory may cause the hot air to flow backward and damage the tool and create a hazard.

Installing or removing battery cartridge

⚠*CAUTION:* Always switch off the tool before installing or removing of the battery cartridge.

⚠*CAUTION:* Hold the tool and the battery cartridge firmly when installing or removing battery cartridge. Failure to hold the tool and the battery cartridge firmly may cause them to slip off your hands and result in damage to the tool and battery cartridge and a personal injury.

► **Fig.3:** **1.** Red indicator **2.** Button **3.** Battery cartridge

To remove the battery cartridge, slide it from the tool while sliding the button on the front of the cartridge.

To install the battery cartridge, align the tongue on the battery cartridge with the groove in the housing and slip it into place. Insert it all the way until it locks in place with a little click. If you can see the red indicator as shown in the figure, it is not locked completely.

⚠*CAUTION:* Always install the battery cartridge fully until the red indicator cannot be seen. If not, it may accidentally fall out of the tool, causing injury to you or someone around you.

⚠*CAUTION:* Do not install the battery cartridge forcibly. If the cartridge does not slide in easily, it is not being inserted correctly.

OPERATION

NOTE: At first use of the heat gun, some smoke may emit from the nozzle. This is normal and will soon decrease.

Switching On and Off

Switching On

— Pull the lock off lever downwards and pull in the switch trigger to switch on tool.

— Press in the lock on button on the left with your thumb to keep the tool running.

Switching Off

— Release the switch trigger to stop.

— To stop the tool from the locked position, pull the switch trigger fully to unlock. Release the switch trigger to stop.

► **Fig.4:** **1.** Lock off lever **2.** Switch trigger **3.** Lock on button

Temperature setting (DHG181)

The temperature is adjustable by turning the temperature dial. The dial is marked 1 (lowest temperature) to 6 (highest temperature).
Adjust to suitable temperature for your applications.
The following table suggests setting for different applications.

Setting	Applications
1 (Ambient temperature)	Cooling the hot parts.
	Cooling the machines before changing the nozzle.
2 - 6	Drying paint and varnish.
	Removing stickers.
	Waxing and de-waxing.
	Shrinking PVC wrapping and insulation tubes.
	Thawing frozen pipes.
	Welding plastics.
	Bending plastic pipes and sheets.

Air volume setting (DHG181)

The air volume is adjustable by switching the air volume switch at position 1 or 2.
► **Fig.5:** **1.** Air volume switch (1/2)

Using the tool with it stands on its own

This tool can be used with upright position or with the heat nozzle facing up as shown in the figure.
When using the tool with it stands on its own, turn on the switch and then press in the lock on button to keep the tool running.
► **Fig.6**

⚠*WARNING:* Only use the tool in either posture as shown. Turn off the switch before putting down the tool in other postures.

⚠*CAUTION:* When using the tool with it stands on its own, put the tool on the stable position. Using the tool on unstable place or a place with a slope, the tool may fall down and cause an injury.

Cooling down

The heating nozzle and accessories became very hot during use. Let them cool down before attempting to move or store the tool.

⚠*CAUTION:* After use, do not touch nozzle until it has had time to cool.

⚠*CAUTION:* Do not leave work area until tool has cooled. Be alert for indications of concealed fire. Allow time for the tool to cool then clean and store the tool indoors out of children's reach.

FUNCTIONAL DESCRIPTION

LED light

⚠*CAUTION:* Do not look in the light or see the source of light directly.

Pull the switch trigger to light up the lamp. The lamp keeps on lighting while the switch trigger is being pulled. The lamp goes out approximately 10 seconds after releasing the switch trigger.

NOTE: Use a dry cloth to wipe the dirt off the lens of the lamp. Be careful not to scratch the lens of lamp, or it may lower the illumination.

Hook

The hook allows you to hang the tool to your selected location.

1. Press the hook release button.
2. Swing the hook outside.

► **Fig.7:** **1.** Hook release button **2.** Hook

To store the hook, swing the hook to the original position, and then push the hook into the tool until it clicks.
► **Fig.8**

Tool / battery protection system

The tool is equipped with a tool/battery protection system. This system automatically cuts off power to the motor to extend tool and battery life. The tool will automatically stop during operation if the tool or battery is placed under one of the following conditions.

Overdischarge protection

When the battery capacity becomes low, the tool stops automatically. If the product does not operate even when the switches are operated, remove the batteries from the tool and charge the batteries.

Protections against other causes

Protection system is also designed for other causes that could damage the tool and allows the tool to stop automatically. Take all the following steps to clear the causes, when the tool has been brought to a temporary halt or stop in operation.

1. Turn the tool off, and then turn it on again to restart.
2. Charge the battery(ies) or replace it/them with recharged battery(ies).
3. Let the tool and battery(ies) cool down.

If no improvement can be found by restoring protection system, then contact your local Makita Service Center.

Indicating the remaining battery capacity

Only for battery cartridges with the indicator

► **Fig.9: 1.** Indicator lamps **2.** Check button

Press the check button on the battery cartridge to indicate the remaining battery capacity. The indicator lamps light up for a few seconds.

Indicator lamps			Remaining capacity
Lighted	Off	Blinking	
■	■	■	75% to 100%
■	■	□	50% to 75%
■	□	□	25% to 50%
■	□	□	0% to 25%
▨	□	□	Charge the battery.
■ ↑↓ □	■	□	The battery may have malfunctioned.
	□	■	

NOTE: Depending on the conditions of use and the ambient temperature, the indication may differ slightly from the actual capacity.

NOTE: The first (far left) indicator lamp will blink when the battery protection system works.

MAINTENANCE

CAUTION: **Always be sure that the tool is switched off and the battery cartridge is removed before attempting to perform inspection or maintenance.**

NOTICE: **Never use gasoline, benzine, thinner, alcohol or the like. Discoloration, deformation or cracks may result.**

To maintain product SAFETY and RELIABILITY, repairs, any other maintenance or adjustment should be performed by Makita Authorized or Factory Service Centers, always using Makita replacement parts.

The tool has been designed to operate over a long period of time with a minimum of maintenance. Continuous satisfactory operation depends upon proper care and regular cleaning of the tool.

Lubrication

No lubrication is needed for this product.

Cleaning

- Keep the ventilation openings and switch trigger clean and free of foreign materials.
- Clean the tool with soft cloth periodically and preferably after each time of use.

OPTIONAL ACCESSORIES

CAUTION: **These accessories or attachments are recommended for use with your Makita tool specified in this manual.** The use of any other accessories or attachments might present a risk of injury to persons. Only use accessory or attachment for its stated purpose.

If you need any assistance for more details regarding these accessories, ask your local Makita Service Center.

- Nozzle
- Pressure roller
- Scraper
- Makita genuine battery and charger

NOTE: Some items in the list may be included in the tool package as standard accessories. They may differ from country to country.

VARNING

- För användare i Europa:
  Denna apparat kan användas av barn från 8 års ålder och äldre samt personer med nedsatt fysisk eller mental kapacitet eller brist på erfarenhet och kunskap, förutsatt att de har fått handledning eller instruktioner om hur apparaten används på ett säkert sätt och förstår riskerna som användandet kan innebära. Barn ska inte leka med apparaten. Rengöring och användarunderhåll ska inte utföras av barn utan tillsyn.
- För användare utanför Europa:
  Denna apparat är inte avsedd att användas av personer (inklusive barn) med nedsatt fysisk, sensorisk eller mental förmåga, eller personer utan erfarenhet av och kunskap om apparaten, såvida de inte har övervakats eller fått instruktioner angående användningen av apparaten av en person som är ansvarig för deras säkerhet. Barn ska övervakas så att de inte leker med apparaten.
- **Se anvisningar om lämpliga försiktighetsåtgärder vid användarunderhåll i kapitlet ”UNDERHÅLL”.**
- Om apparaten inte hanteras med försiktighet finns risk för brand. Se därför till att
  - **vara försiktig när apparaten används i närheten av lättantändliga material;**
  - **inte rikta varmluften mot samma plats under alltför lång tid;**
  - **inte använda den där atmosfären kan vara explosiv ;**
  - **tänka på att värme kan ledas vidare till lättantändliga material som är utom synhåll;**
  - **ställa apparaten i dess ställ efter användning och låta den svalna innan den stuvas undan;**
  - **inte lämna apparaten utan uppsyn när den är påslagen.**

Det här är en batteridriven apparat. Vid uppladdning tas batterikassetten bort från apparaten.

- **Se batteriets typreferens i kapitlet ”SPECIFIKATIONER”.**
- **Se i avsnittet ”Montera eller demontera batterikassetten” hur du tar bort eller installerar batteriet.**
- **När batterikassetten ska kasseras måste den tas bort från verktyget och kasseras på ett säkert sätt. Följ lokala föreskrifter beträffande avfallshantering av batteriet.**
- **Om apparaten inte används under en längre tid måste batteriet tas bort från apparaten.**
- **Kortslut inte batterikassetten.**

SPECIFIKATIONER

Modell:	**DHG180**	**DHG181**
Märkspänning	18 V likström	
Temperatur	550 °C	Omgivningstemperatur - 550 °C
Luftvolym	200 l/min	1: 120 l/min 2: 200 l/min
Dimensioner (L x B x H) med BL1860B	168 mm x 79 mm x 251 mm	173 mm x 79 mm x 255 mm
Nettovikt	1,0 - 1,3 kg	1,0 - 1,4 kg

- På grund av vårt pågående program för forskning och utveckling kan dessa specifikationer ändras utan föregående meddelande.
- Specifikationer och batterikassett kan variera mellan olika länder.
- Vikten kan variera beroende på tillbehören, inklusive batterikassett. Den lättaste och den tyngsta kombinationen enligt EPTA-procedur 01/2014 visas i tabellen.

Tillgänglig batterikassett och laddare

Batterikassett	BL1815N / BL1820B / BL1830B / BL1840B / BL1850B / BL1860B
Laddare	DC18RC / DC18RD / DC18RE / DC18SD / DC18SE / DC18SF / DC18SH

- Vissa av batterikassetterna och laddarna på listan ovan kanske inte finns tillgängliga i din region.

⚠ ***VARNING:*** **Använd endast batterikassetter och laddare från listan ovan.** Användning av andra batterikassetter och laddare kan orsaka personskada och/eller brand.