| | | | |
|---|---|---|---|
| EN | Cordless Radio with Lantern | Instruction manual | 4 |
| SV | Sladdlös radio med lykta | Bruksanvisning | 13 |
| NO | Trådløs radio med lykt | Instruksjonsmanual | 21 |
| FI | Langaton radio ja lyhty | Käyttöohje | 29 |
| DA | Trådløs radio med lygte | Instruktionsmanual | 37 |
| LV | Bezvadu radio ar lukturi | Instrukciju rokasgrāmata | 46 |
| LT | Belaidis radijas su žibintu | Naudojimo instrukcija | 55 |
| ET | Juhtmeta raadio koos laternaga | Kasutusjuhend | 64 |
| RU | Аккумуляторный Радио-Фонарь | Инструкция по эксплуатации | 72 |
| KK | Қайта зарядталатын Радио Фонарь | Пайдалану нұсқаулығы | 82 |


# DMR056/
# MR009G

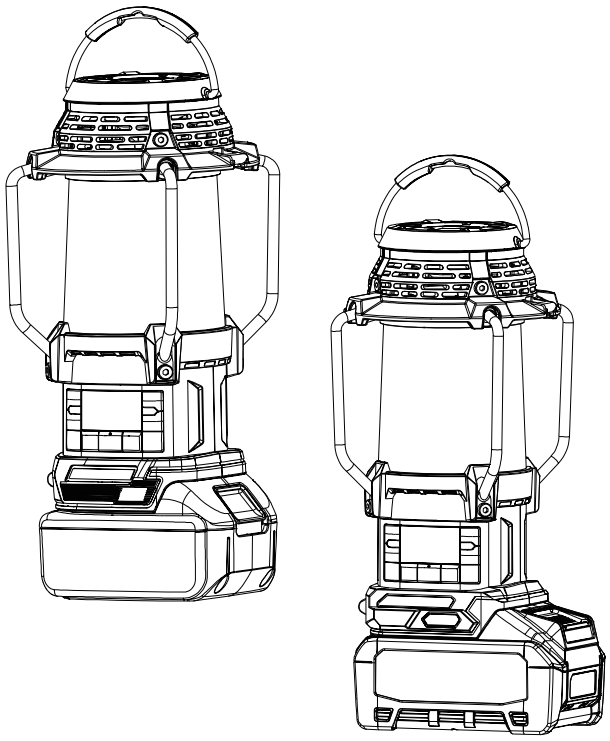

Bluetooth®

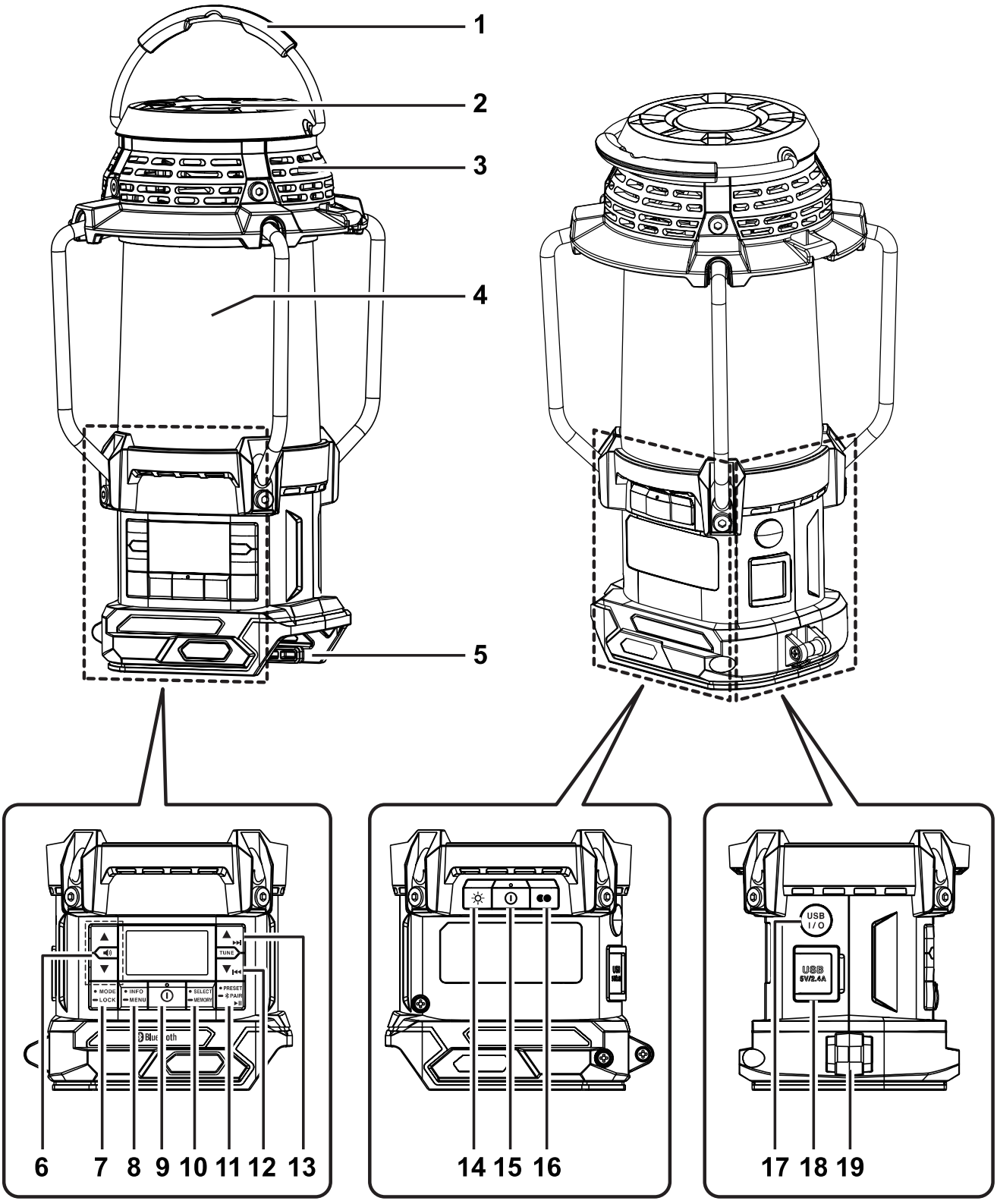
1
2
3
4
5
TUNE
MODE
LOCK
INFO
MENU
SELECT
MEMORY
PRESET
& PAIR
USB
I / O
USB
5V/2.4A
6 7 8 9 10 11 12 13
14 15 16
17 18 19

1

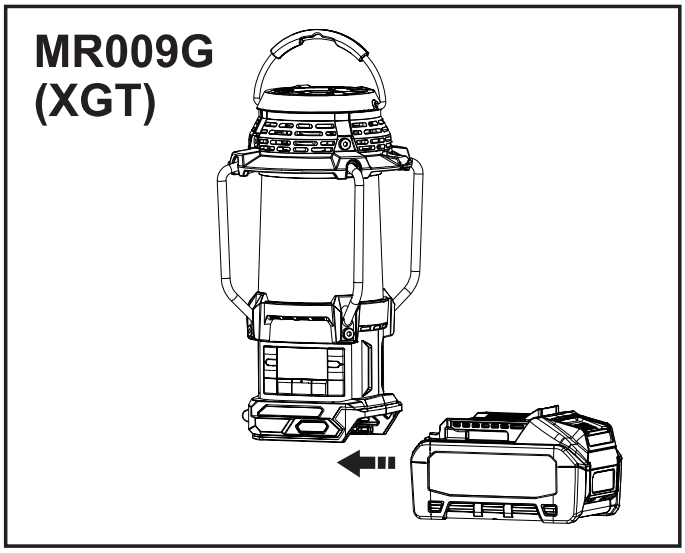


2

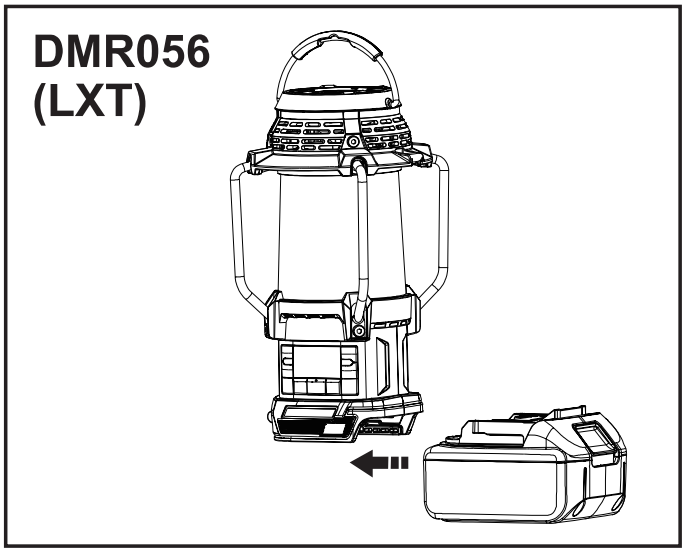


3

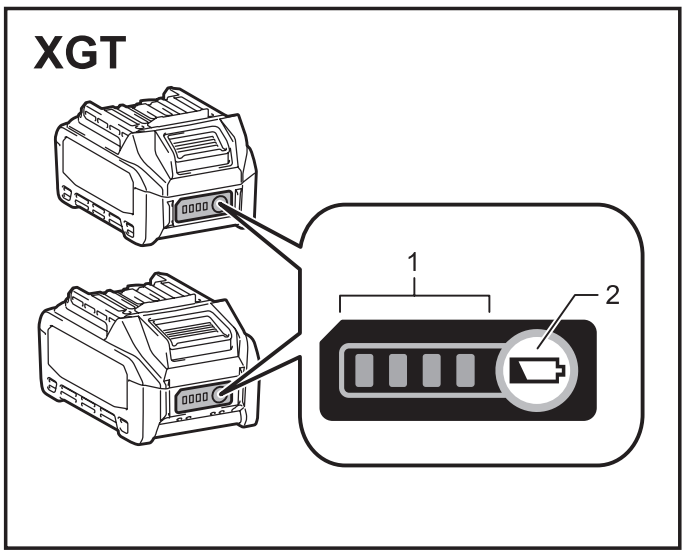


4

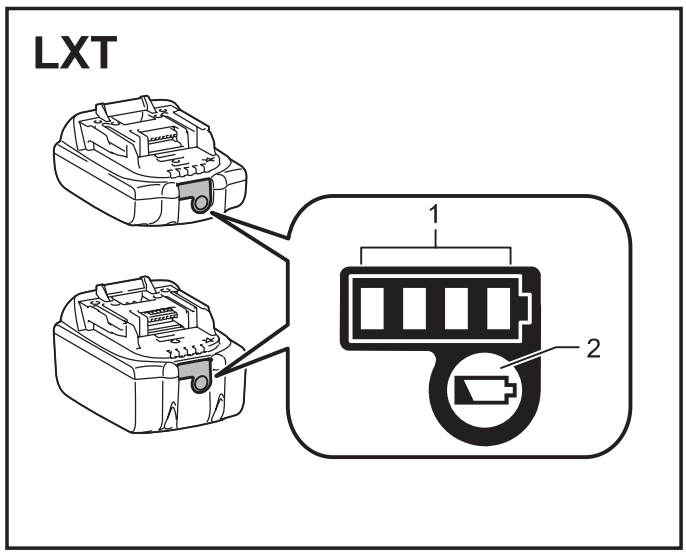


5

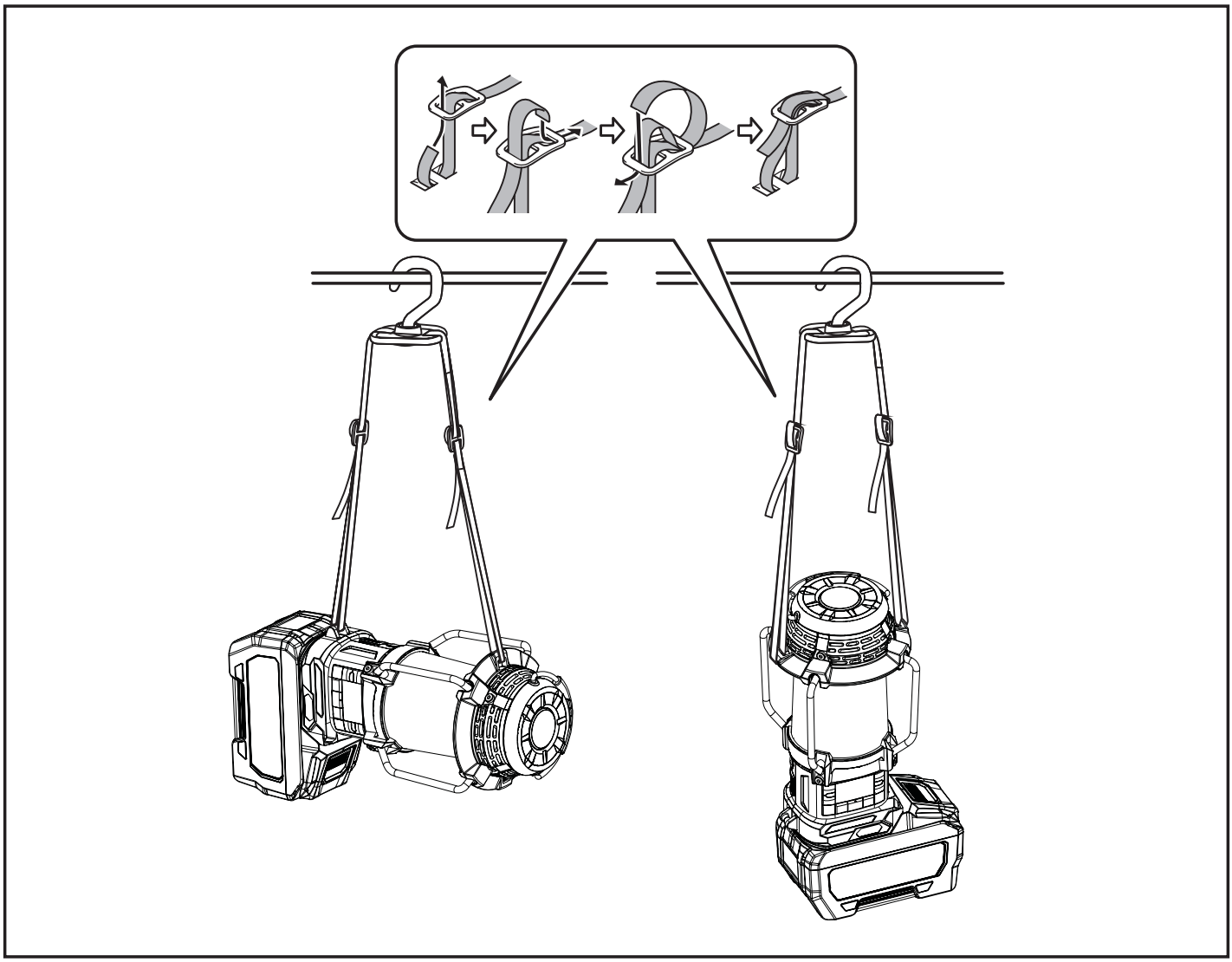

6

## ENGLISH
## (Original instructions)

## EXPLANATION OF GENERAL VIEW (Fig. 1)

1. Carrying handle
2. Flashlight
3. Speaker
4. LED Lantern
5. Battery compartment
6. Volume up/down button
7. Mode/Lock button
8. Info/Menu button
9. Power button
10. Select/Memory button
11. Preset/Bluetooth pairing/Play/Pause button
12. Tuning down/Previous track/Rewind button
13. Tuning up/Next track/Fast-forward button
14. Light brightness button
15. Light on/off button/Light mode button
16. Color temperature button
17. USB charging on/off button/Charging LED indicator
18. USB power supply port
19. Strap buckle

## SYMBOLS

The following show the symbols used for the equipment.
Be sure that you understand their meaning before use.



Read instruction manual.




Only for EU countries

Due to the presence of hazardous components in the equipment, waste electrical and electronic equipment, accumulators and batteries may have a negative impact on the environment and human health. Do not dispose of electrical and electronic appliances or

batteries with household waste! In accordance with the European Directive on waste electrical and electronic equipment and on accumulators and batteries and waste accumulators and batteries, as well as their adaptation to national law, waste electrical equipment, batteries and accumulators should be stored separately and delivered to a separate collection point for municipal waste, operating in accordance with the regulations on environmental protection. This is indicated by the symbol of the crossed-out wheeled bin placed on the equipment.

# IMPORTANT SAFETY INSTRUCTIONS

⚠ ***WARNING:***

When using this product, basic safety precautions should always be followed to reduce the risk of fire, electric shock, and personal injury, including the following:

1. Read this instruction manual and the charger instruction manual carefully before use.
2. Clean only with dry cloth.
3. Do not install near any heat sources such as radiators, heat registers, stoves, or other apparatus (including amplifiers) that produce heat.
4. Only use attachments/accessories specified by the manufacturer.
5. A battery operated radio with integral batteries or a separate battery pack must be recharged only with the specified charger for the battery. A charger that may be suitable for one type of battery may create a risk of fire when used with another battery.
6. Use battery operated radio only with specifically designated battery packs. Use of any other batteries may create a risk of fire.
7. When battery pack is not in use, keep it away from other metal objects like: paper clips, coins, keys, nails, screws, or other small metal objects that can make a connection from one terminal to another. Shorting the battery terminals together may cause sparks, burns, or a fire.
8. Avoid body contact with grounded surfaces such as pipes, radiators, ranges and refrigerators. There is an increased risk of electric shock if your body is grounded.
9. Under abusive conditions, liquid may be ejected from the battery; avoid contact. If contact accidentally occurs, flush with water. If liquid contacts eyes, additionally seek medical help. Liquid ejected from the battery may cause irritation or burns.
10. Do not use a battery pack or tool that is damaged or modified. Damaged or modified batteries may exhibit unpredictable behaviour resulting in fire, explosion or risk of injury.
11. Do not expose a battery pack or tool to fire or excessive temperature. Exposure to fire or temperature above 130°C (266°F) may cause explosion.
12. Follow all charging instructions and do not charge the battery pack or tool outside the temperature range specified in the instructions. Charging improperly or at temperatures outside the specified range may damage the battery and increase the risk of fire.
13. Do not use the product at a high volume for any extended period. To avoid hearing damage, use the product at moderate volume level.
14. (For products with LCD display only) LCD displays include liquid which may cause irritation and poisoning. If the liquid enters the eyes, mouth or skin, rinse it with water and call a doctor.
15. Do not expose the product to rain or wet conditions. Water entering the product will increase the risk of electric shock.
16. This product is not intended for use by persons (including children) with reduced physical, sensory or mental capabilities, or lack of experience and knowledge, unless they have been given supervision or instruction concerning use of the product by a person responsible for their safety. Children should be supervised to ensure that they do not play with the product. Store the product out of the reach of children.

## SAVE THESE INSTRUCTIONS

# SPECIFIC SAFETY RULES FOR BATTERY CARTRIDGE

1. Before using battery cartridge, read all instructions and cautionary markings on (1) battery charger, (2) battery, and (3) product using battery.
2. Do not disassemble battery cartridge.
3. If operating time has become excessively shorter, stop operating immediately. It may result in a risk of overheating, possible burns and even an explosion.
4. If electrolyte gets into your eyes, rinse them out with clear water and seek medical attention right away. It may result in loss of your eyesight.
5. Do not short the battery cartridge:
   (1) Do not touch the terminals with any conductive material.
   (2) Avoid storing battery cartridge in a container with other metal objects such as nails, coins, etc.

(3) Do not expose battery cartridge to water or rain. A battery short can cause a large current flow, overheating, possible burns and even a breakdown.

6. Do not store and use the tool and battery cartridge in locations where the temperature may reach or exceed 50°C (122°F).
7. Do not incinerate the battery cartridge even if it is severely damaged or is completely worn out. The battery cartridge can explode in a fire.
8. Be careful not to drop or strike battery.
9. Do not use a damaged battery.
10. To avoid risk, the manual of replaceable the battery should be read before use.
11. The contained lithium-ion-batteries are subject to the Dangerous Goods Legislation requirements. For commercial transports e.g. by third parties, forwarding agents, special requirement on packaging and labeling must be observed. For preparation of the item being shipped, consulting an expert for hazardous material is required. Please also observe possibly more detailed national regulations. Tape or mask off open contacts and pack up the battery in such a manner that it cannot move around in the packaging.
12. When disposing the battery cartridge, remove it from the tool and dispose of it in a safe place. Follow your local regulations relating to disposal of battery.
13. Use the batteries only with the products specified by Makita. Installing the batteries to non-compliant products may result in a fire, excessive heat, explosion, or leak of electrolyte. If the tool is not used for a long period of time, the battery must be removed from the tool.
14. If the tool is not used for a long period of time, the battery must be removed from the tool.
15. Do not allow chips, dust, or soil stuck into the terminals, holes, and grooves of the battery cartridge. It may result in poor performance or breakdown of the tool or battery cartridge.
16. Keep the battery away from children.
17. During and after use, the battery cartridge may take on heat which can cause burns or low temperature burns.
18. Do not touch the terminal of the tool immediately after use as it may get hot enough to cause burns.
19. Unless the tool supports the use near a high-voltage electrical power lines, do not use the battery cartridge near a high-voltage electrical power lines. It may result in a malfunction or breakdown of the tool or battery cartridge.

⚠ ***CAUTION:***
**Only use genuine Makita batteries. Use of nongenuine Makita batteries, or batteries that have been altered, may result in the battery bursting causing fires, personal injury and damage. It will also void the Makita warranty for the Makita tool and charger.**

## Tips for maintaining maximum battery life

1. Charge the battery cartridge before completely discharged. Always stop tool operation and charge the battery cartridge when you notice less tool power.
2. Never recharge a fully charged battery cartridge. Overcharging shortens the battery service life.
3. Charge the battery cartridge with room temperature at 10°C - 40°C (50°F - 104°F). Let a hot battery cartridge cool down before charging it.
4. When not using the battery cartridge, remove it from the tool or the charger.
5. Charge the battery cartridge if you do not use it for a long period (more than six months).

# OPERATING TIME

* The suitable battery packs for this radio listed as the following table.

* The following table indicates the operating time on a single charge.

| Model | Battery cartridge | | Battery capacity | Unit: Hour (Approximately) | | |
|---|---|---|---|---|---|---|
| | | | | Radio* | Lantern (360° light coverage) | Flash Light (torch mode) |
| DMR056 | LXT (14.4V) | BL1415N | 1.5Ah | 11 | 4.0 | 8.5 |
| | | BL1430B | 3.0Ah | 19 | 7.0 | 14 |
| | | BL1440 | 4.0Ah | 30 | 11 | 22 |
| | | BL1460B | 6.0Ah | 39 | 15 | 29 |
| | LXT (18V) | BL1815N | 1.5Ah | 13 | 4.5 | 9.0 |
| | | BL1820B | 2.0Ah | 17 | 6.0 | 12 |
| | | BL1830B | 3.0Ah | 24 | 8.5 | 16 |
| | | BL1840B | 4.0Ah | 34 | 12 | 23 |
| | | BL1850B | 5.0Ah | 44 | 16 | 30 |
| | | BL1860B | 6.0Ah | 53 | 19 | 37 |
| MR009G | XGT (36V-40Vmax) | BL4020 | 2.0Ah | 20 | 13 | 26 |
| | | BL4025 | 2.5Ah | 24 | 16 | 31 |
| | | BL4040 | 4.0Ah | 36 | 24 | 46 |
| | | BL4050F | 5.0Ah | 51 | 34 | 66 |

* AT SPEAKERS OUTPUT=100mW

⚠ ***WARNING:***

**Only use the battery cartridges listed above. Use of any other battery cartridges may cause injury and/or fire.**

**NOTE:**

- Table regarding to the battery operating time above is for reference.
- The actual operating time may differ with the type of the battery, charging condition, or usage environment.
- Some of the battery cartridges listed above may not be available depending on your region of residence.

# Recommended cord connected power source

| Model | Portable power pack |
|---|---|
| DMR056 | PDC01 |
| MR009G | PDC01/PDC1200 |

- The cord connected battery pack (s) listed above may not be available depending on your region of residence.
- Before using the cord connected battery pack, read instruction and cautionary markings on them.

# INSTALLATION AND POWER SUPPLY

⚠ **CAUTION:**

- Always switch off the radio before installing or removing the battery cartridge.
- Be careful not to drop or strike the radio. Broken shell may slash your finger or stab your body. Damaged radio may exhibit unpredictable behaviour resulting in fire, explosion or risk of injury.
- Hold the tool and the battery cartridge firmly when installing or removing battery cartridge.

**IMPORTANT:**

- Reduced power, distortion, stuttering sound or screen backlight flashing are all the signs that the battery needs to be replaced.
- The battery cartridge is not included as standard accessories.

## Installing or removing the sliding battery cartridge (Fig. 2-3)

- To install the battery cartridge, align the tongue on the battery cartridge with the groove in the housing and slip it into place. Always insert it all the way until it locks in place with a little click.
- If you can see the red indicator on the upper side of the button, it is not locked completely. Install it fully until the red indicator cannot be seen. If not, it may accidentally

fall out of the radio, causing injury to you or someone around you.

- Do not use force when installing the battery cartridge. If the cartridge does not slide in easily, it is not being inserted correctly.
- To remove the battery cartridge, slide it from the radio while sliding the button on the front of the cartridge.

## Indicating the remaining battery capacity (Fig. 4-5)

➢ **1. Indicator lamps** **2. Check button**

Press the check button on the battery cartridge to indicate the remaining battery capacity. The indicator lamps light up for few seconds.

- **XGT/LXT battery cartridge**

| Indicator lamps | | | Remaining capacity |
|---|---|---|---|
| Lighted | Off | Blinking | |
| ■ | ■ | ■ | 75% ~ 100% |
| ■ | ■ | ■ | 50% ~ 75% |
| ■ | ■ | | 25% ~ 50% |
| ■ | | | 0% ~ 25% |
| ◪ | | | Charge the battery |
| ■ ↑ | ■ ↓ | | The battery may have malfunctioned |
| | | ■ | |

**NOTE:**

- Depending on the conditions of use and the ambient temperature, the indication may differ slightly from the actual capacity.
- The first (far left) indicator lamp will brink when the battery protection system works.

## Charging with USB power supply port

**NOTE:**

- Connect only devices which are compatible with DC 5V, 2.4A power source to the USB power supply port. Otherwise it may cause malfunction to the product.
- Connect the USB cable (not included) with the USB power supply port of the product. And then connect the other end of the cable with the device.
- To start charging, press the USB charging on/off button to enable the charging function. The USB charging on/off button will light up green.
- When the battery power is low, the screen backlight will flash until the charging function is turned off.
- If the charging function is turned on without charging, the USB charging on/off button will flash green, and the charging function will be automatically turned off after 30 minutes.
- To stop charging, press the USB charging on/off button to disable the charging function.
- The maximum volume of the output power speaker will decrease when your USB is charging.

**IMPORTANT:**

- Before connecting USB device to the charger, always backup your data of USB device. Otherwise your data may lose by any possibility.
- The charger may not supply power to some USB devices.
- When not using or after charging, remove the USB cable and close the cover.
- Do not connect this USB socket with your PC USB port, as it is highly possible that it may cause breakdown of the units.

# LISTENING TO DAB RADIO

## Tuning into DAB stations

To tune into DAB radio stations, follow these steps:

1. Turn on the radio using the Power button.
2. Select the DAB radio mode by repeatedly pressing the Mode button.
3. If this is the first time the DAB radio mode is being used, the radio will automatically perform a full scan in order to find all available DAB radio stations. During the scanning process, as new stations are detected the station counter will increase and the stations will be added to the list which is stored in the radio. The bar graph indicates the progress of the scan.
4. When scanning is completed, the radio will list all stations that were found. Use the Tuning up or Tuning down button to scroll through the list of stations and press the Select button to tune into a station.

**NOTE:**

For DAB radio mode, if the radio's reception is not good, it may be necessary to relocate your radio to a position giving better reception.

## The DAB radio menu

You can open the DAB radio menu by pressing and holding the Info/Menu button while the radio is in the DAB radio mode. Use the Tuning up or Tuning down button to select one of the options and then press the Select button to confirm your choice.

The radio's default and recommended settings are indicated using an asterisk.

The DAB radio menu offers the following options:

- **[Full Scan]:** Select this option to perform a full scan and store all DAB radio stations that were found in the station list.

- **[Manual tune]:** Select this option to manually tune into a DAB channel/frequency.
- **[DRC]:** Dynamic Range Control (also known as DRC) can make quieter sounds easier to hear when your radio is used in a noisy environment by reducing the dynamic range of the audio signal.
  Select this option and then use the Tuning up or Tuning down button to highlight the required DRC setting:
  **[1]:** Maximum compression applied.
  **[1/2]:** Medium compression applied.
  **[0]:** No compression applied.
  Press the Select button to confirm the setting.
- **[Station order]:** Select this option and subsequently **[Alphanumeric]** to sort the station list alphanumerically or select **[Ensemble]** to sort the station list by DAB multiplex or select **[Valid]** to show only those stations for which a signal can be found.
- **[System]:** Select this option to go to the system menu settings and configure the radio (refer to the chapter "Using the System menu" for details).
- **[Back]:** Select this option to go back one step in the radio's menus or return to the previous screen.

### Showing DAB information on the display

When listening to a DAB radio broadcast, repeatedly press the Info/Menu button to cycle through the following information on the radio's display:

- Dynamic Label Segment (Scrolling text)
- Program type
- Multiplex name
- Frequency and channel
- Signal error/Strength
- Bit rate/Audio type
- Date

## LISTENING TO FM RADIO

### Tuning into FM stations

To tune into FM radio stations, follow these steps:

1. Turn on the radio using the Power button.
2. Select the FM radio mode by repeatedly pressing the Mode button.
3. Press and hold the Tuning up or Tuning down button to automatically tune into an FM station with a higher or lower frequency respectively. Your radio will stop scanning when it finds a station of sufficient strength. The display will show the frequency of the signal which has been found. If RDS information is available, after a few seconds the display will show the radio station name.
4. Press the Tuning up or Tuning down button to fine-tune the frequency with steps of 0.05MHz if needed.
5. Repeat the steps 3 and 4 to tune into other radio stations.

**NOTE:**
For FM radio mode, if the radio's reception is not good, it may be necessary to relocate your radio to a position giving better reception.

### The FM radio menu

You can open the FM radio menu by pressing and holding the Info/Menu button while the radio is in the FM radio mode. Use the Tuning up or Tuning down button to select one of the options and then press the Select button to confirm your choice.
The radio's default and recommended settings are indicated using an asterisk.
The FM radio menu offers the following options:

- **[Scan Zone]:** Select this option to configure if the radio should only look for strong signals (“Local”) or all signals (“Distant”) when using the automatic tuning feature.
- **[System]:** Select this option to go to the system menu settings and configure the radio (refer to the chapter "Using the System menu" for details).
- **[Back]:** Select this option to go back one step in the radio's menus or return to the previous screen.

### Showing FM information on the display

When listening to a FM radio station that is also broadcasting RDS data, repeatedly press the Info/Menu button to cycle through the following information on the radio's display:

- Radio text
- Program type
- Frequency
- Audio mode
- Date

If no RDS information is available, the radio will be unable to display the text message and program type.

### Presetting stations in DAB and FM modes

There are 9 memory presets each for DAB and FM radio. They are used in the same way for each operating mode.

1. Turn on the radio, then select the DAB or FM radio mode and Tune to the required radio station as previously described.
2. Press and hold the Select/Memory button. The display will show a “Save to Preset” menu.
3. Press the Tuning up or Tuning down button to select the required Preset number. Then press the Select button to store the preset station. "Saved" will be shown on the display indicating the station is stored under the selected preset number. If another station has already been stored under the chosen preset number, that

station will be overwritten. Repeat this procedure as needed for the remaining presets.

## Recalling a preset in DAB and FM modes

1. Turn on the radio and then select the DAB or FM radio mode using the Mode button.
2. Press the Preset button to display the “Preset Recall” menu.
3. Select a preset number using the Tuning up or Tuning down button and then press the Select button to confirm your choice. The radio will now tune into the selected preset. If the Select button or any other button is not pressed, the radio will also tune into the selected preset after 2 seconds. The chosen preset number is shown in the upper area of the radio display.

## Using the System menu

The System menu can be used to configure the radio. Follow these steps to access the system settings:

1. Turn on the radio using the Power button.
2. Press and hold the Info/Menu button to open the menu for the current mode.
3. Use the Tuning up or Tuning down button to select **[System]** and press the Select button to open the menu.
   The System menu offers the following options:
   Use the Tuning up or Tuning down button to select one of the options and then press the Select button to confirm your choice.
   The radio's default and recommended settings are indicated using an asterisk.
   - **[Time/Date]:** Select this option to set the source for automatically updating the time and date and set the time format. The subsequent option **[Auto update]** allows you to select a source for automatically updating the time and date and **[Set format]** allows you to select the 12 or 24 hour format. If the 12 hour clock format is chosen, the radio will display a 12 hour clock with an AM or PM indicator.
   - **[Language]:** Select this option to configure the language in which the radio's menus are shown.
   - **[Radio Reset]:** Select this option to reset the radio to the default factory settings. After confirmation, all user settings and preset stations will be erased.
   - **[SW Upgrade]:** Software updates for your radio may be available in the future. As software updates become available software and information on how to update your radio can be found at Makita website. Select this option to perform a software upgrade.
   - **[SW Version]:** Select this option to view the software version of the radio. To exit the software display, press the Info/Menu button.
   - **[Back]:** Select this option to go back one step in the radio's menus or return to the previous screen.

# LISTENING TO MUSIC VIA BLUETOOTH STREAMING

You need to pair your Bluetooth device with the radio before you can auto-link to play/stream Bluetooth music through the radio. Pairing creates a ‘bond’ so two devices can recognize each other.

**Note:**

- To have the better sound quality, we recommend setting the volume to more than two-thirds level on your Bluetooth device and then adjust the volume on the radio as required.
- The radio can memorize up to 8 sets of paired device, when the memory exceed this amount, the oldest pairing history will be over written.

## Pairing your Bluetooth device for the first time

1. Press the Power button to turn on the radio. Press the Mode button to select Bluetooth mode. The Bluetooth status icon flashes and "Pairing" appears on the display to show the radio is discoverable.
2. Activate Bluetooth on your device according to the device’s user manual to link to the radio. Locate the Bluetooth device list and select the device with the name of your radio (With some mobiles which are equipped with earlier versions than BT2.1 Bluetooth device, you may need to input the pass code “0000”).
3. Once connected, there will be a confirmation tone sound. The Bluetooth icon will cease flashing and display a check mark next to it. You can simply select and play any music from your source device. Volume control can be adjusted from your source device, or directly from the radio.
4. Use the controls on your Bluetooth-enabled device or on the radio to play/pause and navigate tracks.

**Note:**

- If 2 Bluetooth devices, pairing for the first time, both search for the radio, it will show its availability on both devices. However, if one device links with this unit first, then the other Bluetooth device won’t find it on the list.
- If your Bluetooth device is temporarily disconnected to the radio, then you need to manually reconnect your device again to the radio.
- If the name of your radio shows in your Bluetooth device list but your device cannot connect with it, please delete the item from your list and pair the device with the radio again following the steps described previously.
- The optimal Bluetooth transmission range is approximately 10 meters (33 feet) in line of sight to

the radio, but a distance up to 30 meters (100 feet) is possible.

- If Bluetooth connection is lost due to exceeding time of separation, exceeding the optimum distance, obstacles or otherwise, reconnecting your device with the radio may be necessary.
- Physical obstacles, other wireless devices or electromagnetic devices may affect the connection quality.
- Bluetooth connectivity performance may vary depending on the connected Bluetooth devices. Please refer to the Bluetooth capabilities of your device before connecting to the radio. All features may not be supported on some paired Bluetooth devices.

### Playing audio files in Bluetooth mode

When you have successfully connected the radio with the chosen Bluetooth device you can start to play your music using the controls on your connected Bluetooth device.

1. Once playing has started, the volume can be adjusted both on the radio using the Volume buttons and on the Bluetooth device using the volume control of the device.
2. Use the controls on your Bluetooth device to play/pause and navigate tracks. Alternatively, control the playback using Play/Pause, Next track, Previous track buttons on your radio.
3. Press and hold the Fast-forward or Rewind button to move through the current track. Release the button when the desired point is reached.

**Note:**

- Some player applications or devices may not respond to all of these controls.
- Some mobile phones may temporarily disconnect from the radio when you make or receive calls. Some devices may temporarily mute their Bluetooth audio streaming when they receive text messages, emails or for other reasons unrelated to audio streaming. Such behaviour is a function of the connected device and does not indicate a fault with the radio.

### Playing a previously-paired Bluetooth source device

If your Bluetooth device already paired with the radio previously, the unit will memorize your Bluetooth device and it attempts to reconnect with a device in memory which is last connected. If the last connected device is not available, the radio will be discoverable.

### Disconnecting your Bluetooth device

Press and hold the Bluetooth pairing button for 2-3 seconds until "Pairing" appears on the display or turn off Bluetooth on your Bluetooth device to disable the connection.

You can also press the Mode button to select any mode other than Bluetooth mode to disable the connection.

## LED LANTERN/FLASHLIGHT FUNCTION

1. Press the Light on/off button repeatedly to select different light modes. This multifunctional LED lantern/flashlight features 4 different modes, you can select the suitable light operation mode for each application.
   The 4 light modes are as follows:
   **Lantern (360˚ light coverage)**
   **Lantern (side-carry mode)**
   **Flashlight (torch mode)**
   **Flashlight (strobe mode)**
2. Press the Light brightness button to adjust the suitable light brightness.
3. Press the Color temperature button to select different color temperatures.
4. Press and hold the Light on/off button to turn off the light.

**Note:**

In side-carry mode, only three sides of the lantern are lit. When using the strap, the lantern can be positioned as the side-carry mode to prevent the light from blinding user's eyes.

## MISCELLANEOUS SETTINGS

### Key lock

The key lock function is used to prevent unintentional operation of the radio.

1. Press and hold the Lock button for 2-3 seconds until “Keys Locked” appears on the display. All buttons except the Power button will be disabled.
2. To release the lock, press and hold the Lock button for 2-3 seconds until “Keys Unlocked” appears on the display.

### Using the strap (Fig. 6)

Using the supplied strap, you can hang the product in different ways whenever needed. (Refer to the installation method in Figure 6.)

## MAINTENANCE

⚠ **CAUTION:**

- Never use gasoline, benzine, thinner, alcohol or the like. Discoloration, deformation or cracks may result.
- Do not wash the radio with water.

# SPECIFICATIONS

| Model | DMR056 | MR009G |
|---|---|---|
| Battery | 14.4V & 18V | 36V - 40Vmax |
| Frequency coverage | FM: 87.50-108MHz (0.05MHz/step)<br>DAB/DAB+: 174.928-239.200 MHz | |
| DAB/DAB+ Channel block | DAB (Band III) 5A-13F | |
| Compatible standard | DAB/DAB+ | |
| Antenna system | FM/DAB: Built-in antenna | |
| USB output | 5V / 2.4A | |
| Loudspeaker | 2.25 inches | |
| Output power | 14.4V: 2.4W<br>18V: 3W | 36V: 3W |
| Dimensions (L x W x H) | 126 x 129 x 289mm<br>(with BL1860B) | 126 x 166 x 315mm<br>(with BL4050F) |
| Weight (without battery) | 0.98KG | 0.99KG |
| Bluetooth®<br>(The Bluetooth® word mark and logos are registered trademarks owned by Bluetooth SIG, Inc.) | | |
| Bluetooth Version | 5.0 Certified | |
| Bluetooth Profiles | A2DP/SCMS-T/AVRCP | |
| Transmission Power | Power Class2 | |
| Transmission Range | Optimum range: Within 10 meters (33 feet)<br>Maximum range: Up to 30 meters (100 feet)<br>(It may vary according to different conditions.) | |
| Bluetooth Codec | SBC, AAC | |
| Maximum radio frequency power | BT EDR: 3.88dBm | BT EDR: 3.90dBm |
| Operating Frequency | 2402MHz ~ 2480MHz | |

# SVENSKA (Originalanvisningar)

## Förklaring av allmän översikt (bild.1)

1. Bärhandtag
2. Ficklampa
3. Högtalare
4. LED-lykta
5. Batterifack
6. Volym upp/ner knapp
7. Läge/låsknapp
8. Info/Meny-knapp
9. Strömknapp
10. Val/minne-knapp
11. Förinställning/Bluetooth-parning/Spela/Paus-knapp
12. Tuning ned/Föregående låt/ Återspolningsknapp
13. Tuning upp/Nästa låt/Snabbspolning framåt
14. Knapp för ljusstyrka
15. Ljus på/av-knapp/Ljuslägesknapp
16. Färgtemperaturknapp
17. USB-laddning på/av-knapp/Laddnings-LED-indikator
18. USB-port för strömförsörjning
19. Remspänne

## SYMBOLER

Följande visar de symboler som används för utrustningen. Se till att du förstår innebörden före användning.



Läs bruksanvisningen.




Endast för EU-länder

På grund av närvaron av farliga komponenter i utrustningen kan avfall som är elektrisk och elektronisk utrustning ackumulatorer och batterier ha en negativ inverkan på miljön och människors hälsa. Kasta inte elektriska och elektroniska apparater eller batterier tillsammans med hushållsavfall! I enlighet med det europeiska direktivet om avfall som är elektrisk och elektronisk utrustning och om ackumulatorer och batterier och avfallsackumulatorer och batterier, samt deras anpassning till nationell lagstiftning, bör avfallselektrisk utrustning, batterier och ackumulatorer lagras separat och levereras till en separat insamlingsplats för kommunalt avfall, som fungerar i enlighet med föreskrifterna om miljöskydd.
Detta indikeras av symbolen för den överkorsade papperskorgen som placeras på utrustningen.

## VIKTIG SÄKERHETSINFORMATION INSTRUKTIONER

⚠ ***VARNING:***

När du använder denna produkt bör grundläggande säkerhetsföreskrifter alltid följas för att minska risken för brand, elektriska stötar och personskador, inklusive följande:

1. Läs denna bruksanvisning and laddarens bruksanvisning noga innan användning.
2. Rengör endast med torr trasa.
3. Installera inte i närheten av värmekällor såsom element, värmeutsläpp, spisar eller andra apparater (inklusive förstärkare) som avger värme.
4. Använd endast tillbehör/tillbehör som anges av tillverkaren.
5. En batteridriven radion med integrerade batterier eller ett separat batteri får endast laddas med angiven laddare för batteriet. En laddare som lämpar sig för en typ av batteri kan orsaka brand om den används tillsammans med en annan typ av batteri.
6. Använd endast särskilt avsedda batterier i den batteridrivna radion. Om andra batterier används kan risk för brand uppstå.
7. När batteriet inte används, hålla det borta från andra metallföremål som: gem, mynt, nycklar, spikar, skruvar eller andra små metallföremål som kan göra en anslutning från en terminal till en annan. Kortslutning av batteripolerna tillsammans kan orsaka gnistor, brännskador eller brand.
8. Undvik kroppskontakt med jordade ytor som rör, värmeelement, spisar och kylskåp. Det finns en ökad risk för elstötar om din kropp är jordad.
9. Enligt felaktig användning kan vätska komma ut från batteriet; undvik kontakt. Om kontakt uppstår oavsiktligt, spola med vatten. Om vätska från batteriet kommer i kontakt med ögonen, sök medicinsk hjälp. Vätska från batteriet kan orsaka irritation eller brännskador.
10. Använd inte ett batteripaket eller verktyg som är skadat eller modifierat. Skadade eller modifierade batterier kan uppvisa oförutsägbart beteende som leder till brand, explosion eller risk för skada.
11. Utsätt inte ett batteri eller ett verktyg för eld eller hög temperatur. Exponering för brand eller temperatur över 130°C (266°F) kan orsaka explosion.
12. Följ alla laddningsanvisningar och ladda inte batteriet eller verktyget utanför det temperaturområde som anges i anvisningarna. Om du laddar felaktigt eller vid temperaturer utanför det angivna området kan det skada batteriet och öka risken för brand.