OLYMPIATOOLS®

GOOD QUALITY. GREAT VALUE.

USER MANUAL

650W 82mm/3¼" PLANER

PL650

2* YEAR GUARANTEE



UK CA CE

CONTENTS

SAFETY INFORMATION 3-5

SAFETY WARNING SYMBOLS 3
- Safety warning symbols - Planer 3
- Compliance and recycling symbols 3

SAFETY WARNINGS - GENERAL POWER TOOLS 4-5
- Work area safety 4
- Electrical safety 4
- Personal safety 4-5
- Power tool use and care 5
- Service 5

SAFETY WARNINGS - PLANER 5

IN THE BOX 6

OPERATION INSTRUCTIONS 7-11
- Intended use 7
- On/off switch 7
- Adjusting the planing depth 7
- Surface planing 7
- Edge chamfering 8
- Using the parallel guide 8
- Using the rebate guide 8
- Rebating 9
- Using the removable dust bag 9
- Cleaning the dust outlet and emptying the bag 9
- Blade fitting and changing 9-10
- Correct blade settings 11
- Useful tips 11

MAINTENANCE 11

TECHNICAL SPECIFICATIONS 12-13
- Planer 12
- Noise/vibration information 12-13

DISPOSAL 14
- Packaging materials 14
- Electrical products 14

STORAGE 15

PLUG REPLACEMENT (UK AND IRELAND ONLY) 16

GUARANTEE 17

UK DECLARATION OF CONFORMITY 18

EU DECLARATION OF CONFORMITY 19

SAFETY INFORMATION



IMPORTANT: To reduce risk of injury, please read this user guide before assembly.

SAFETY WARNING SYMBOLS

The following warning symbols appear throughout this user guide and indicate the appropriate safety measures you should take when assembling and operating the planer.

⚠ WARNING!

This symbol marks a point of safety, indicating a warning. Ignoring this safety symbol could result in an accident to yourself or others. To limit the risks of injury, fire or electrocution, always follow the recommendations indicated.

Safety warning symbols - Planer



Protection Class II
(double insulated)

Compliance and recycling symbols



Complies with relevant European regulations



Waste electrical products must not be disposed of with household waste. Please recycle where facilities exist. Check with your local authority or retailer for recycling advice.

SAFETY INFORMATION



IMPORTANT: To reduce risk of injury, please read this user guide before assembly.

SAFETY WARNINGS - GENERAL POWER TOOLS

⚠ WARNING!

Read all safety warnings and instructions. Failure to follow warnings and instructions may result in electric shock, fire and/or serious injury.

Save all warnings and instructions for future reference.

The term "power tool" in the warnings refers to your mains-operated (corded) power tool or battery-operated (cordless) power tool.

Work area safety

1. **Keep work area clean and well lit.** Cluttered or dark areas invite accidents.
2. **Do not operate power tools in explosive atmospheres, such as in the presence of flammable liquids, gases or dust.** Power tools create sparks which may ignite the dust or fumes.
3. **Keep children and bystanders away while operating a power tool.** Distractions can cause you to lose control.

Electrical safety

1. **Power tool plugs must match the outlet. Never modify the plug in any way. Do not use any adapter plugs with earthed (grounded) power tools.** Unmodified plugs and matching outlets will reduce risk of electric shock.
2. **Avoid body contact with earthed or grounded surfaces, such as pipes, radiators, ranges and refrigerators.** There is an increased risk of electric shock if your body is earthed or grounded.
3. **Do not expose power tools to rain or wet conditions.** Water entering a power tool will increase the risk of electric shock.
4. **Do not abuse the cord. Never use the cord for carrying, pulling or unplugging the power tool. Keep cord away from heat, oil, sharp edges or moving parts.** Damaged or entangled cords increase the risk of electric shock.
5. **When operating a power tool outdoors, use an extension cord suitable for outdoor use.** Use of a cord suitable for outdoor use reduces the risk of electric shock.
6. **If operating a power tool in a damp location is unavoidable, use a residual current device (RCD) protected supply.** Use of an RCD reduces the risk of electric shock.

Personal safety

1. **Stay alert, watch what you are doing and use common sense when operating a power tool. Do not use a power tool while you are tired or under the influence of drugs, alcohol or medication.** A moment of inattention while operating power tools may result in serious personal injury.
2. **Use personal protective equipment. Always wear eye protection.** Protective equipment such as dust mask, non-skid safety shoes, hard hat, or hearing protection used for appropriate conditions will reduce personal injuries.



3. **Prevent unintentional starting. Ensure the switch is in the off-position before connecting to power source and/or battery pack, picking up or carrying the tool.** Carrying power tools with your finger on the switch or energising power tools that have the switch on invites accidents.

4. **Remove any adjusting key or wrench before turning the power tool on.** A wrench or a key left attached to a rotating part of the power tool may result in personal injury.
5. **Do not overreach. Keep proper footing and balance at all times.** This enables better control of the power tool in unexpected situations.
6. **Dress properly. Do not wear loose clothing or jewellery. Keep your hair, clothing and gloves away from moving parts.** Loose clothes, jewellery or long hair can be caught in moving parts.
7. **If devices are provided for the connection of dust extraction and collection facilities, ensure these are connected and properly used.** Use of dust collection can reduce dust-related hazards.

Power tool use and care

1. **Do not force the power tool. Use the correct power tool for your application.** The correct power tool will do the job better and safer at the rate for which it was designed.
2. **Do not use the power tool if the switch does not turn it on and off.** Any power tool that cannot be controlled with the switch is dangerous and must be repaired.
3. **Disconnect the plug from the power source and/or the battery pack from the power tool before making any adjustments, changing accessories, or storing power tools.** Such preventive safety measures reduce the risk of starting the power tool accidentally.
4. **Store idle power tools out of the reach of children and do not allow persons unfamiliar with the power tool or these instructions to operate the power tool.** Power tools are dangerous in the hands of untrained users.
5. **Maintain power tools. Check for misalignment or binding of moving parts, breakage of parts and any other condition that may affect the power tool's operation. If damaged, have the power tool repaired before use.** Many accidents are caused by poorly maintained power tools.
6. **Keep cutting tools sharp and clean.** Properly maintained cutting tools with sharp cutting edges are less likely to bind and are easier to control.
7. **Use the power tool, accessories and tool bits etc. in accordance with these instructions, taking into account the working conditions and the work to be performed.** Use of the power tool for operations different from those intended could result in a hazardous situation.

Service

Have your power tool serviced by a qualified repair person using only identical replacement parts. This will ensure that the safety of the power tool is maintained.

SAFETY INFORMATION



IMPORTANT: To reduce risk of injury, please read this user guide before assembly.

SAFETY WARNINGS - PLANER

1. **Wait for the cutter to stop before setting the tool down.** An exposed rotating cutter may engage the surface leading to possible loss of control and serious injury. The above warning applies only to planers without an automatic closing guard.
2. **Hold the power tool by the insulated soft grip surfaces only, because the cutter may contact its own cord.** Cutting a "live" wire may make exposed metal parts of the power tool "live" and could give the operator an electric shock.
3. **Use clamps or another practical way to secure and support the workpiece to a stable platform.** Holding the work by your hand or against the body leaves it unstable and may lead to loss of control.
4. **Always wear a dust mask.**

IN THE BOX



1. Planing depth adjustment knob
2. Dust outlet
3. On/off switch
4. Switch lock-on button
5. Soft grip handle
6. Reversible planer blades (fitted to the machine)
7. Removable dust bag
8. Rebate guide
9. Parallel guide
10. Spanner
11. Hex key

OPERATION INSTRUCTIONS

IMPORTANT: To reduce risk of injury, please read this user guide before use.

Intended use

The tool is intended for planing of firmly supported wooden materials, such as beams and boards. It is also suitable for beveling edges and rebating.

On/off switch (See fig. A)

The switch is locked off to prevent accidental starting. Depress the lock off button then the on/off switch and release the lock off button. To switch off, just release the on/off switch.

⚠ WARNING!

Danger of kickback! Apply the tool to the work piece only when switched on.

Fig. A



Adjusting the planing depth (See fig. B)

The planing depth can be adjusted from 0 to 2mm. Rotate the planing depth adjustment knob (1) to set the required cutting depth with the scale. Clockwise rotation increases the planing depth; anticlockwise rotation reduces the planing depth.

It is recommended that test cuts be made in scrap wood after each adjustment to make sure that desired amount of wood is being removed by your planer.

To protect blades during storage, transporting, etc., set planing depth adjustment knob to '0'.

Fig. B

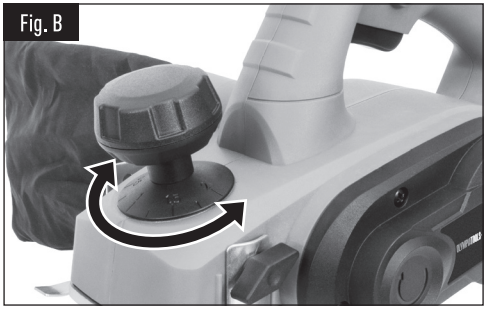

Surface planing (See fig. C)

Set the desired cutting depth. Position the front part of the base plate flat onto the work surface. Make sure that the blades are not touching the workpiece. Switch the tool on and push your planer forward and it will start cutting. Always maintain all of the base plate flat on the work surface to prevent the cutting blade jumping. Move the plane evenly over the work surface.

Be careful to avoid hitting nails during operation. It could nick, crack, or damage blades. We suggest that you always keep an extra set of blades on hand for replacement.

Fig. C



Edge chamfering (See fig. D, E)

⚠ WARNING!

Always use both hands on the tool for any operation. It assures to maintain control and avoid the risk of serious personal injury. The workpiece must always be properly supported and clamped so that both hands will be free to control the planer.

Using the V-groove in the base plate you can make a chamfer on the work piece edge. Guide the planer along the edge and maintain a constant angle and force to produce a good finish. You can control the angle of the chamfer with your hands. Make a test chamfer on a scrap piece of wood. Maintain downward pressure to keep your planer flat at the beginning and the end of the work surface.

Fig. D

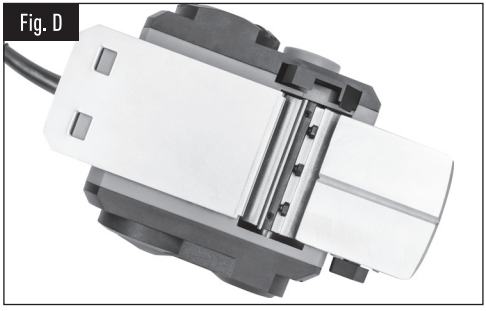

Fig. E

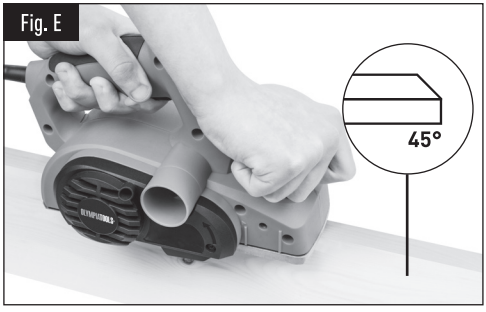

Using the parallel guide (See fig. F)

Insert the screw provided through the hole on the support of parallel guide (9). Turn the screw into the nut on the housing.

Fix the parallel guide on the support of parallel guide with the screw and nut. Ensure the screws are tightened securely.

The parallel guide should be fitted on the left of the housing.

To adjust the required width of cut, loosen the nut and slide the parallel guide to the required position. Retighten the nut fully. To use the parallel guide while cutting, the guide should be held firmly against the edge of the workpiece.

Fig. F



Using the rebate guide (See fig. G)

Insert the screw (a) provided through the slot on the rebate guide (8). Turn the screw into the nut on the housing.

The cut depth adjustment can be set from 0 to 10mm.

To adjust the depth of cut, place the planer on a flat board, then loosen the screw and slide the cut depth adjustment guide up and down for required depth. Tighten the thumb screw fully.

Fig. G

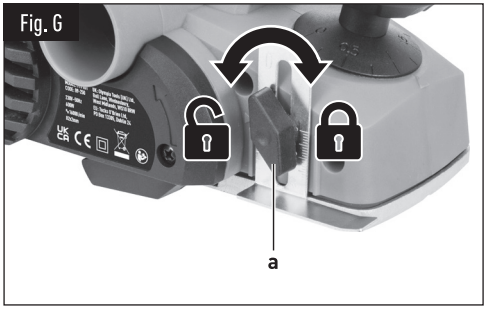

Rebating (See fig. H)

The width of rebating cut (a) is adjustable by moving the parallel guide (9). The depth of rebating cut (b) is determined by moving the rebate guide (8), and the number of passes made along the workpiece. Make sure that the plane is guided with a lateral supporting pressure.

Fig. H

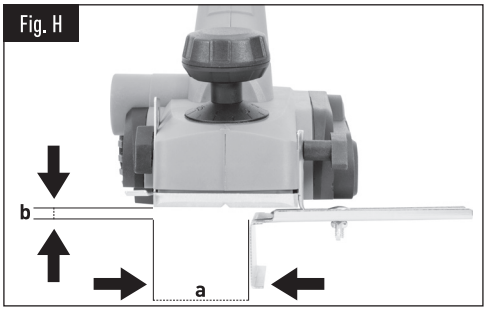

Using the removable dust bag (See fig. I)

Your planer is equipped with a dust bag for collection of wood chips in the work area.

Make sure the zipper on the bag is fully closed. To fit the removable dust bag (7), simply insert the tube end of the bag into the dust outlet (2).

Fig. I

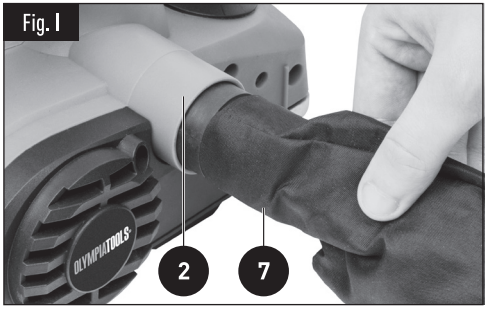

Cleaning the dust outlet and emptying the bag

After using your planer for an extended period of time or when planing wet green timber, chips may build-up in the dust outlet and require clearing. Chip build-up restricts air flow and causes the motor to overheat. Turn off the planer and remove the dust bag from the dust outlet. Clean the chip and dust outlet of your planer with a small piece of wood. Do not use your hands or fingers. Unzip the dust bag and empty all chips from it. Ensure the collar is free from debris. We recommend emptying the dust bag every 3-6 minutes.

Blade fitting and changing (See fig. J, K, L, M)

⚠ WARNING!

Risk of burns. The tool may still be hot on completion of the work, There is a risk of burning. Allow a hot tool to cool down. Never clear a hot tool with flammable liquids.

⚠ WARNING!

Risk of injury (cuts from sharp edges). There is a danger of cutting even with a stationary tool. Wear gloves when changing blades.

⚠ WARNING!

Remove power cord from the socket before carrying out any adjustments or changing blades. Always put on gloves when replacing blades. Using the spanner (10) provided to loosen the three installation screws approximately 1/2 rotation anticlockwise.

Dull and worn blade cannot be resharpened and must be replaced. Always replace blades in pairs.

Note: The planing blades have two cutting edges and can be reversed. Blades needs to be changed when both cutting edges are blunt.

Do not over-loosen the screws. If the screws are too loose, the alignment of the new blade will not be accurate.

Before removing the old blades, take notice of the direction of cut as well as how the tapered edge of the old blades are oriented. The tapered edge of the new blades must be in the same orientation as the original blades.

Press the safety cover down with your finger. Push the blade out with the tip of the spanner (or screwdriver) and then remove.

There is no need to remove the blade clamp as this will change the factory settings for cutting blade height control.

If a blade cannot be pushed out easily after loosening the screws, use a piece of wood to break the blade loose from the blade clamp, with a short sharp blow. Then push with a screwdriver to remove the blades. If necessary, tap the piece of wood sharply with a small hammer to break the blades loose.

Fig. J

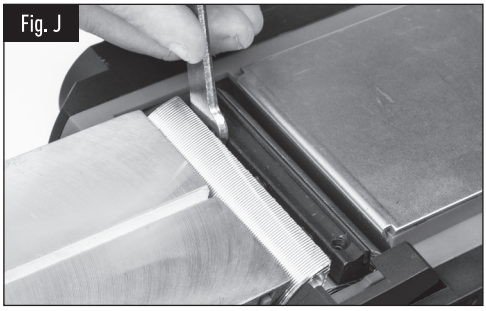

Fig. K



Fig. L

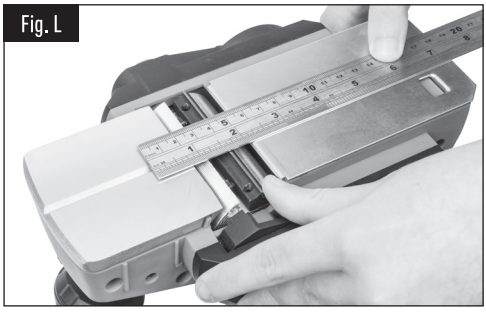

Fig. M

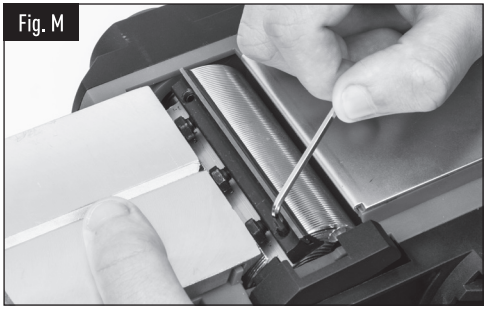

Before reinserting a new or reverse blade, always clean both the blade and the blade seat if dirty. Slide the blade into the clamp with the spanner (or screwdriver) in the correct orientation. Check blade is equal with the clamp. Retighten the three blade screws with the spanner.

Repeat the above procedure to change the other blade.

After the blades are replaced, check the blades are parallel and in the same surface as the rear base plate with a ruler. If not, you can adjust the blades with the hex key (11) provided. Firstly loosen the three screws on the blade clamp. Turn the socket head screw clockwise, the blade will rise. Turn it anticlockwise, the blade will be lowered down. Finally retighten the three screws fully.

Correct blade setting (See fig. N)

Your planing surface will end up rough and uneven, unless the blades are set properly and securely.

The blade must be mounted so that the cutting edge is absolutely level, that is, parallel to the surface of the rear base. Examples of proper and improper settings are shown below.

Front base - moveable shoe (A)

Rear base - stationary shoe (B)

1. **Correct setting**
   Although this side view cannot show it, the edges of the blade run perfectly parallel to the rear base surface.
2. **Nicks in surface**
   Cause: one or both blades fails to have edge parallel to rear base line.
3. **Gouging at start**
   Cause: one or both blade edges fails to protrude enough in relation to rear base line.
4. **Gouging at end**
   Cause: one or both blade edges protrude too far in relation to rear base line.

Fig. N

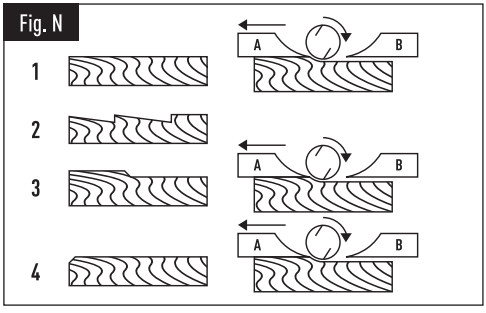

Useful tips

1. For smooth cuts, move the tool along the grain of the wood.
2. When planing cross-grain, curly grain, or hardwood, adjust the depth of cut so that it takes only a very thin shaving at each pass. Then take several passes to achieve the desired result.
3. To keep the tool in a straight line, press down on the front of the tool at the start, and press down on the back of the tool at the end of each cutting stroke.

MAINTENANCE

Remove the plug from the socket before carrying out any adjustment, servicing or maintenance.

Your power tool requires no additional lubrication or maintenance. There are no user serviceable parts in your power tool.

Never use water or chemical cleaners to clean your power tool. Wipe clean with a dry cloth.

Always store your power tool in a dry place.

Keep the motor ventilation slots clean. Keep all working controls free of dust.

If you see some sparks flashing in the ventilation slots, this is normal and will not damage your power tool.

If the supply cord is damaged, it must be replaced by the manufacturer, its service agent or similarly qualified persons in order to avoid a hazard.

TECHNICAL SPECIFICATIONS

Planer

Model	YT9102 (PL650)
Code	09-250
Mains supply	230-240V 50Hz
Power input	650W
No-load speed	16000/min
Planing width	82mm
Planing depth	0-2mm
Rebating depth	0-10mm
Protection class II	⧈
Weight	2.80kg

Noise/vibration information

Noise

A weighted sound pressure	L_{pA}: 85dB (A)
A weighted sound power	L_{wA}: 96dB (A)
	K_{pA} and K_{wA} =3.0dB(A)

⚠ WARNING!

Wear ear protection when sound pressure is over: 80dB(A)

Vibration

Vibration total values (triax vector sum) determined according to EN 62841:

Planing softwood	Vibration emission value $a_{h,B}$ = 6.63m/s²
	Uncertainty K = 1.5m/s²

The declared vibration total value may be used for comparing one tool with another, and may also be used in a preliminary assessment of exposure.

⚠ WARNING!

The vibration emission value during actual use of the power tool can differ from the declared value depending on the ways in which the tool is used for example:

How the tool is used and the materials being cut or drilled.

The tool being in good condition and well maintained.

Use of the correct accessory for the tool and ensuring it is sharp and in good condition.

The tightness of the grip on the handles and whether any anti-vibration accessories are used.

The tool is being used as intended by its design and as detailed in this user guide.

This tool may cause hand-arm vibration syndrome if its use is not adequately managed.

⚠ WARNING!

To be accurate, an estimation of exposure level in the actual conditions of use should also take account of all parts of the operating cycle such as the times when the tool is switched off and when it is running idle but not actually doing the job. This may significantly reduce the exposure level over the total working period.

ALWAYS use sharp chisels, drills and blades.

Maintain this tool in accordance with these instructions and keep well lubricated (where appropriate).

If the tool is to be used regularly then invest in anti-vibration accessories.

Avoid using tools in temperatures of 10^0C or less.

Plan your work schedule to spread any high vibration tool use across a number of days.

DISPOSAL

Packaging materials

Dispose of in an environmentally friendly way by adding to your recyclable waste bin, or by taking it to a public collection centre.



Electrical products

Waste electrical products should not be disposed of with household waste. Please recycle where facilities exist. Check with your Local Authority or retailer for recycling advice.



STORAGE

Store the machine, operating instructions and where necessary the accessories in the original packaging. In this way you will always have all the information and parts ready to hand.

Pack the device well or use the original packaging in order to avoid transit damage.

Always keep the machine in dry place.

PLUG REPLACEMENT (UK AND IRELAND ONLY)

If you need to replace the fitted plug then follow the instructions below.

⚠ WARNING!

The wires in the mains lead are coloured in accordance with the following code:
Blue – Neutral
Brown – Live

As the colours of the wires in the mains lead of this appliance may not correspond with the coloured markings identifying the terminals in your plug, proceed as follows. The wire which is coloured blue must be connected to the terminal which is marked with 'N'. The wire which is coloured brown must be connected to the terminal which is marked with 'L'.

⚠ WARNING!

Never connect live or neutral wires to the earth terminal of the plug. Only fit an approved BS1363/A plug and the correct rated fuse. Note: If a moulded plug is fitted and has to be removed take great care in disposing of the plug and severed cable, it must be destroyed to prevent engaging into a socket.

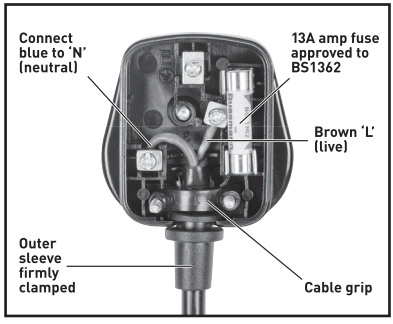

GUARANTEE

This product is selected for **DOMESTIC USE ONLY** and not for business use. This product is guaranteed against manufacturing defects for a period of 24 months. This does not cover the product where the fault is due to misuse, abuse, use in contravention of the instructions, or where the product has been the subject of unauthorised modifications or alterations, or has been the subject of commercial use. In the event of a problem with the product within the guarantee period please return it to your nearest store. If the item is shown to have an inherent defect present at the time of sale, the store will provide you with a replacement. Your statutory rights remain unaffected.

UK DECLARATION OF CONFORMITY

1. Apparatus product/model

Product: **650W 82mm/3¼" Planer**

Model: **YT9102 (PL650)**

2. This declaration of conformity is issued under the sole responsibility of the manufacturer

3. Object of the declaration

Product: **650W 82mm/3¼" Planer**

Model: **YT9102 (PL650)**

Rated voltage: **230-240V 50Hz**

4. This 650W 82mm/3¼" Planer, model number YT9102 (PL650), fully complies with the Supply of Machinery (Safety) Regulations 2008, Electromagnetic Compatibility Regulations 2016, the Restriction of Use of Certain Hazardous Substances in Electrical & Electronic Equipment Regulations 2012, and the following standards:

EN 62841-1:2015+AC:15	EN 55014-2:2015
EN 62841-2-14:2015	EN IEC 61000-3-2:2019
EN 55014-1:2017+A11:2020	EN 61000-3-3:2013+A1:2019

5. This declaration is made under the sole responsibility of:
SUMEC HARDWARE AND TOOLS CO., LTD.
No. 1 Xinghuo Road, Jiangbei New Arga, Nanjing, Jiansu, 210061 China

Chief Engineer
Wenjun

Date: Mar,29,2021

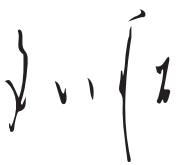

EU DECLARATION OF CONFORMITY

1. Apparatus product/model

Product: **650W 82mm/3¼" Planer**

Model: **YT9102 (PL650)**

---

2. This declaration of conformity is issued under the sole responsibility of the manufacturer

---

3. Object of the declaration

Product: **650W 82mm/3¼" Planer**

Model: **YT9102 (PL650)**

Rated voltage: **230-240V 50Hz**

---

4. This 650W 82mm/3¼" Planer, model number YT9102 (PL650), fully complies with the Machinery Directive 2006/42/EC, Electromagnetic Compatibility Directive 2014/30/EC, RoHS Directive 2011/65/EU and the following harmonized EU standards:

EN 62841-1:2015+AC:15
EN 62841-2-14:2015
EN 55014-1:2017
EN 55014-2:2015
EN 61000-3-2:2014
EN 61000-3-3:2013

---

5. This declaration is made under the sole responsibility of:
SUMEC HARDWARE AND TOOLS CO., LTD.
No. 1 Xinghuo Road, Jiangbei New Arga, Nanjing, Jiansu, 210061 China

Chief Engineer
Wenjun

Date: Apr,13,2020

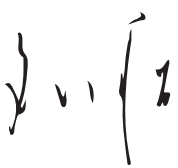

OLYMPIATOOLS®
GOOD QUALITY. GREAT VALUE.

UK: Olympia Tools [UK] Ltd, Bull Lane,
Wednesbury, West Midlands, WS10 8RW

EU: Tucks O'Brien Ltd, 24 Magna Drive,
Magna Business Park, Citywest Road,
Dublin D24 FNY0, Ireland

09-250