RECORD POWER
ESTABLISHED 1909®

Original Instructions

DS300

12" Cast Iron Disc Sander

Version 3.2
November 2022

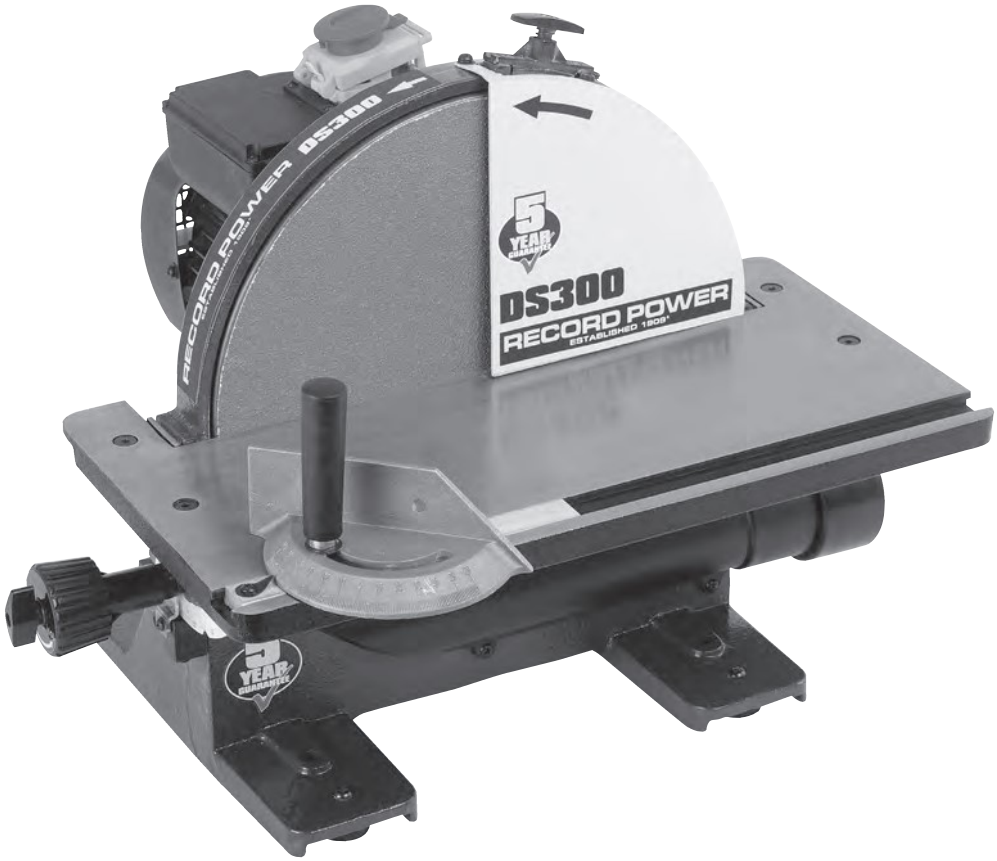

5 YEAR GUARANTEE

To register this product please visit

www.recordpower.info

It is important to register your product as soon as possible in order to receive efficient after sales support and be entitled to the full **5 year guarantee**. Your statutory rights are not affected. Please see back cover for contact details.





Always wear safety glasses when using woodworking equipment.



Always read the instructions provided before using woodworking equipment.

Important

For your safety read instructions carefully before assembling or using this product.

Save this manual for future reference.

Contents

1.1 Explanation of Symbols
1.2 General Health & Safety Guidance
2 Additional Health & Safety Guidance for Belt & Disc Sanders
3 Record Power Guarantee
4 Getting to Know Your Disc Sander
5 Specifications
6 Contents of the Package
7 Assembly
8 Operation
9 Maintenance & Adjustments
10 Dust Extraction
11 Troubleshooting
12 Electrical Connection & Wiring Diagram
13 Parts List & Diagram
EC Certificate of Conformity
UKCA Certificate of Conformity

1.1 Explanation of Symbols

THE SYMBOLS AND THEIR MEANINGS SHOWN BELOW MAY BE USED THROUGHOUT THIS MANUAL. PLEASE ENSURE THAT YOU TAKE THE APPROPRIATE ACTION WHEREVER THE WARNINGS ARE USED.

Mandatory Instructions


Read and fully understand the instruction manual before attempting to use the machine.


Indicates an instruction that requires particular attention


Wear protective eyewear


Use respiratory protective equipment


Use hearing protection


Use suitable protective footwear


Use protective work gloves

Warning


Indicates a risk of severe personal injury or damage to the machine


Indicates a risk of severe personal injury from electrical shock


Risk of personal injury from lifting of heavy items


Indicates a risk of severe personal injury from airborne objects


Risk of fire

1.2 General Health & Safety Guidance

Ensure that you carefully read and fully understand the instructions in this manual before assembly, installation and use of this product. Keep these instructions in a safe place for future reference.

WARNING: for your own safety, do not attempt to operate this machine until it is completely assembled and installed according to these instructions.

WARNING: When using any machine, basic safety precautions should always be followed to reduce the risk of fire, electric shock and personal injury.

Safe Operation

1. Use Personal Protective Equipment (PPE)

- The operation of any machine can result in foreign objects being thrown into your eyes, which can result in severe eye damage. Protective eyewear or other suitable eye protection or face shield should be used at all times. Everyday spectacles only have impact resistant lenses. They are not protective eyewear and do not give additional lateral protection.
- Use respiratory protective equipment (dust mask etc.) if the machining operation creates dust. Exposure to high levels of dust created by machining hardwoods, softwoods and man made composite boards can result in serious health problems. Some imported hardwoods give off highly irritating dust, which can cause a burning sensation. The use of respiratory protective equipment should not be seen as an alternative to controlling the risk of exposure at source by using adequate dust extraction equipment.
- The use of ear plugs or ear defenders is recommended when the machine is in use, particularly if the noise level exceeds 85 dB.
- Wear suitable protective gloves when handling cutting tools or blades. Gloves should NOT be worn when using the machine as they can be caught in moving parts of the machine.
- Non-slip safety footwear is recommended when using the machine and handling large work pieces.

2. Dress appropriately

- Do not wear loose clothing, neckties or jewellery; they can be caught in moving parts of the machine.
- Roll up long sleeves above the elbow.
- Wear protective hair covering to contain long hair.

3. Safety warnings

- Find and read any warning labels on the machine.
- It is important that any labels bearing health and safety warnings are not removed, defaced or covered. Replacement labels can be obtained by contacting our Customer Service Department.

4. Familiarise yourself with the machine

- If you are not thoroughly familiar with the operation of this machine, obtain advice from your supervisor, instructor, or other qualified person or contact your retailer for information on training courses. Do not use this machine until adequate training has been undertaken.

1.2 General Health & Safety Guidance

5. Take care when moving or positioning the machine

- Some machines can be very heavy. Ensure the floor of the area in which the machine is to be used is capable of supporting the machine.
- The machine and its various components can be heavy. Always adopt a safe lifting technique and seek assistance when lifting heavy components. In some cases it may be necessary to use mechanical handling equipment to position the machine within the work area.
- Some machines have optional wheel kits available to allow them to be manoeuvred around the workshop as required. Care should be taken to install these according to the instructions provided.
- Due to the nature of the design of some machines the centre of gravity will be high making them unstable when moved. Extreme care should be taken when moving any machine.
- If transportation of the machine is required then all precautions relating to the installation and handling of the machine apply. In addition, ensure that any vehicles or manual handling equipment used for transportation are of adequate specification.

6. The machine should be level and stable at all times

- When using a leg stand or cabinet base that is designed to be fitted to the machine, always ensure that it is securely fastened to the machine using the fixings provided.
- If the machine is suitable to be used on a workbench, ensure that the workbench is well constructed and capable of withstanding the weight of the machine. The machine should always be securely fastened to the workbench with appropriate fixings.
- Where possible, floor standing machines should always be secured to the floor with fixings appropriate to the structure of the floor.
- The floor surface should be sound and level. All of the feet of the machine should make contact with the floor surface. If they do not, either re-locate the machine to a more suitable position or use packing shims between the feet and the floor surface to ensure the machine is stable.

7. Remove adjusting keys and wrenches

- Ensure that all adjusting wrenches and keys are removed before switching the machine 'ON'. There is a risk of severe personal injury or damage to the machine from airborne objects.

8. Before switching the machine 'ON'

- Clear the machine table of all objects (tools, scrap pieces etc.)
- Make sure there is no debris between the work piece and the table / work support.
- Ensure that the work piece is not pressed against, or touching the saw blade or cutting tool.
- Check all clamps, work holding devices and fences to ensure that they are secure and cannot move during machining operations.
- Plan the way that you will hold and feed the work piece for the entire machining operation.

9. Whilst machining

- Before starting work, watch the machine while it runs. If it makes an unfamiliar noise or vibrates excessively, switch the machine 'OFF' immediately and disconnect it from the power supply. Do not restart until finding and correcting the source of the problem.

10. Keep the work area clear

- Working clearances can be thought of as the distances between machines and obstacles that allow safe operation of every machine without limitation. Consider existing and anticipated machine needs, size of material to be processed through each machine and space for auxiliary stands and/or work tables. Also consider the relative position of each machine to one another for efficient material handling. Be sure to allow yourself sufficient room to safely operate your machines in any foreseeable operation.
- Cluttered work areas and benches create the risk of accidents. Keep benches clear and tidy away tools that are not in use.
- Ensure that the floor area is kept clean and clear of any dust and debris that may create trip or slip hazards.

11. Consider the work area environment

- Do not expose the machine to rain or damp conditions.
- Keep the work area well lit and ensure that there is artificial lighting available when there is insufficient natural light to effectively light the work area. Lighting should be bright enough to eliminate shadow and prevent eye strain.
- Do not use the machine in explosive environments eg. in the presence of flammable liquids, gases or dust.
- The presence of high levels of dust created by machining wood can present a risk of fire or explosion. Always use dust extraction equipment to minimise the risk.

12. Keep other persons away (and pets)

- The machine is designed to be used by one person only.
- Do not let persons, especially children, touch the machine or extension cable (if used) and keep visitors away from the work area.
- Never leave the machine running unattended. Turn the power supply off and do not leave the machine unattended until it comes to a complete stop.
- If the work area is to be left unattended, all machinery should be switched 'OFF' and isolated from the mains power supply.

13. Store machines safely when not in use

- When not in use, machines should be stored in a dry place, out of reach of children. Do not allow persons unfamiliar with these instructions or with the machine to operate it.

14. Do not overreach

- Choose a working position that allows your body to remain balanced and feed the work piece in to the machine without overreaching.
- Keep proper footing and balance at all times.

15. Electrical supply

- Electrical circuits should be dedicated to each machine or large enough to handle combined motor amp loads. Power outlets should be located near each machine so that power or extension cables are not obstructing high-traffic areas. Observe local electrical guidelines for proper installation of new lighting, power outlets, or circuits.
- The machine must be connected to an earthed power supply.
- The power supply must be equipped with a circuit breaker that provides short circuit, overload and earth leakage protection.
- The voltage of the machine must correspond to the voltage of the mains power supply.
- The mains plug fitted to the machine should always match the power outlet. Do not modify the plug in any way. If a replacement plug is required it should be fitted by a competent person and of the correct type and rating for the machine.
- If you are unsure about any electrical connections always consult a qualified electrician.

16. Avoid unintentional starting of the machine

- Most machines are fitted with a no-volt release (NVR) switch to prevent unintentional starting. If in doubt always ensure the machine switch is in the 'OFF' position before connecting it to the power supply. This means the machine will not automatically start up after a power cut or switching on of the power supply, unless you first reset the start switch.

17. Outdoor use

- Your machine should not be used outdoors.

18. Extension cables

- Whenever possible, the use of extension cables is not recommended. If the use of an extension cable is unavoidable, then it should have a minimum core cross section of 2.5mm^2 and limited to a maximum length of 3 metres.
- Extension cables should be routed away from the direct working area to prevent a trip hazard.

19. Guard against electric shock

- Avoid body contact with earthed or grounded surfaces such as pipes and radiators. There is an increased risk of electric shock if your body is earthed or grounded.

20. Always work within the machine's intended capacities

- Operator safety and machine performance are seriously adversely affected if attempts to make the machine perform beyond its limits

1.2 General Health & Safety Guidance

are made.

21. Do not abuse the power cable

- Never pull the power cable to disconnect it from the power socket. Always use the plug.
- Keep the power cable away from heat, oil and sharp edges.
- Do not use the power cable for carrying or moving the machine.

22. Secure the work piece

- Ensure that the work piece is securely held before starting to machine it.
- When working within 300 mm of the machining area, always use a push stick to feed the work piece in to the blade or cutting tool. The push stick should have a minimum length of 400 mm. If the push stick becomes damaged, replace it immediately.
- Use extra supports (roller support stands etc.) for any work pieces large enough to tip when not held down to the table top.
- Do not use another person as a substitute for a table extension, or as additional support for a work piece that is longer or wider than the basic table, or to help feed, support, or pull the work piece.
- Do not attempt to machine more than one work piece at a time.
- When feeding the work piece towards the blade or cutting tool never position your hands in direct line of the cutting path. Avoid awkward operations and hand positions where a sudden slip could cause your hand or fingers to move into the machining area.

23. Stay alert

- Safety is a combination of operator common sense and alertness at all times when the machine is being used.
- Use all machines with extreme care and do not use the machine when you are tired or under the influence of drugs, alcohol or medication.

24. Use the correct tool for the job

- Do not use the machine for any purpose other than which it was designed.
- When selecting replacement cutting tools and blades, always ensure that they are designed to cut the material that you intend to use them for. If in any doubt seek further advice from the manufacturer.

25. Connect dust extraction equipment

- Always use dust extraction equipment. The dust extractor should be of suitable size and capacity for the machine that it is connected to and have a filtration level appropriate to the type of waste being collected. Refer to the relevant section of the manual for details of the specific dust extraction requirements for this machine.
- The dust extractor should be switched 'ON' before starting the machine that it is connected to. The dust extractor should be left running for 30 seconds after the last machining operation is complete in order to clear any residual waste from the machine.

26. Ensure that the machine is correctly guarded

- Never use the machine if any of the standard safety guards and equipment are removed or damaged.
- Some machines incorporate safety interlocks to prevent the machine from being used without the guards in place. Never attempt to bypass or modify the interlocks to allow the machine to be used without the guards in place.

27. Maintain your machine with care

- This manual gives clear instructions on installation, set up and operation of the machine and also details any routine and preventative maintenance that should be performed periodically by the user.
- Remember always to switch off and unplug the machine from the power supply before carrying out any setting up or maintenance operations.
- Follow any instructions for the maintenance of accessories and consumables.
- Do not use compressed air to clean the machine. Always use a brush to dislodge dust in places that are awkward to reach and a dust extractor to collect the waste.
- Inspect electric cables periodically and, if damaged, have them replaced by an authorised service facility or qualified electrician.
- Inspect extension cables (if used) periodically and replace if damaged.

28. Keep cutting tools sharp and clean

- Correctly maintained cutting tools are easier to control and less likely to bind.
- Cutting tools and blades can become hot during use. Take extreme care when handling them and always allow them to cool before changing, adjusting or sharpening them.

29. Disconnect the machine from the power supply

- When not in use, before servicing, changing blades etc. always disconnect the machine from the power supply.

30. Check for damaged parts

- Before each use of the machine, it should be carefully checked to determine that it will operate properly and perform its intended function.
- Check for alignment of moving parts, binding of moving parts, breakage of parts and any other conditions that may affect the operation of the machine.
- A guard or other part that is damaged should be properly repaired or replaced by a qualified person unless otherwise indicated in this instruction manual.
- Do not use the machine if the switch does not turn the machine 'ON' and 'OFF'.
- Have defective switches replaced by a qualified person.

31. Warning!

- The use of any accessory or attachment, other than those recommended in this instruction manual, or recommended by our Company may present a risk of personal injury or damage to the machine and invalidation of the warranty.

32. Have your machine repaired by a qualified person

- This machine complies with the relevant safety rules and standards appropriate to its type when used in accordance with these instructions and with all of the standard safety guards and equipment in place. Only qualified persons using original spare parts should carry out repairs. Failure to do this may result in considerable danger to the user and invalidation of warranty.

33. Caution! Motor may become hot during use

- It is normal for motors on some machines to become hot to the touch during use. Avoid touching the motor directly when in use.

2. Additional Health & Safety Guidance for Belt & Disc Sanders

Safe Operation

1. Familiarise yourself with the machine

- Machining operations using belt or disc sanders have a history of serious accidents. Most accidents with sanders are caused by the work piece being thrown from the sanding surface or by loose clothing or fingers being caught between the moving parts of the machine.
- The machine is designed for sanding wood and composite board (plywood, MDF etc.). It should not be used for sanding any other materials.

2. Before switching the machine 'ON':

- Ensure that the table / work support is secure and that any fixings which allow adjustment are fully tightened.
- Check the condition of the sanding disc / belt for damage or fraying. Defective discs and belts should be replaced immediately.
- Make sure there are no nails or foreign objects in the part of the work piece to be sanded.
- Plan your work to avoid throwbacks – the work piece can catch on the moving sanding surface and may be torn from the hand.

3. Whilst machining:

- Always apply the work piece to the table / work support before it makes contact with the sanding surface.

- Use extra caution when working with large, very small or irregularly shaped work pieces.
- When sanding irregularly shaped work pieces, plan your work support so it will not slip and be pulled from your hands.
- Never use the machine to finish pieces too small to hold by hand.
- Do not apply excessive force to the work piece. Press the work piece against the sanding surface only hard enough to let it sand without slowing the machine or binding.
- Keep fingers away from the area between the table / work support and sanding surface.
- When using a disc sander, always press the work piece against the side of the disc that is moving down towards the table. Sanding against the side coming up from under the table could damage the work by making it "chatter", or tear the work from the hands and throw it.
- Keep your face and body to one side, out of line of a possible throwback.

4. This machine falls under the scope of the 'Health & Safety at Work etc. Act 1974', and the 'Provision & Use of Work Equipment Regulations 1998'. In addition the elimination or control of risks from wood dust is included in the above regulations and the 'Control of Substances Hazardous to Health (COSHH) Regulations 2002'. We recommend that you study and follow these regulations.

Further guidance is available from The Health & Safety Executive and their website www.hse.gov.uk.

3. Record Power Guarantee

"**Products**" means the Products sold by Record Power subject to these terms and conditions;

"**Record Power**" is Record Power Limited, whose company registration number is 4804158 and registered office address is Centenary House, 11 Midland Way, Barlborough Links, Chesterfield, Derbyshire S43 4XA and sells through a network of Authorised Dealers;

"**Authorised Distributor**" is the nominated importer for your region who will generally sell through a network of Authorised Dealers. Details of Authorised Distributors for specific countries can be found in the Product manual or at www.recordpower.info;

"**Authorised Dealer**" is a retailer or business authorised to sell Record Power Products to end users.

1 Guarantee

1.1 Record Power guarantees that for a period of 5 years from the date of purchase the components of qualifying Products (see clauses 1.2.1 to 1.2.9) will be free from defects caused by faulty construction or manufacture.

1.2 During this period Record Power, its Authorised Distributor or Authorised Dealer will repair or replace free of charge any parts which are proved to be faulty in accordance with paragraphs 1.1 above provided that:

1.2.1 you follow the claims procedure set out in clause 2 below;

1.2.2 Record Power, our Authorised Distributor or Authorised Dealer are given a reasonable opportunity after receiving notice of the claim to examine the Product;

1.2.3 if asked to do so by Record Power, its Authorised Distributor or Authorised Dealer, you return the Product, at your own cost, to Record Power's premises or other approved premises such as those of the Authorised Distributor or supplying Authorised Dealer, for the examination to take place;

1.2.4 the fault in question is not caused by industrial use, accidental damage, fair wear and tear, wilful damage, neglect, incorrect electrical connection, abnormal working conditions, failure to follow our instructions, misuse, or alteration or repair of the Product without our approval;

1.2.5 the Product has been used in a domestic environment only;

1.2.6 the fault does not relate to consumable Products such as blades, bearings, drive belts or other wearing parts which can reasonably be expected to wear at different rates depending on usage (for full details contact Record Power or your local Authorised Distributor);

1.2.7 the Product has not been used for hire purposes, by you or by a previous owner;

1.2.8 the Product has been purchased by you as the guarantee is not transferable from a private sale.

1.2.9 where the Product has been purchased from a retailer, the 5 year guarantee is transferable and begins on the date of the first purchase of the Product and in the event of a claim under this guarantee proof of the original purchase date will be required to validate the warranty period.

2 Claims Procedure

2.1 In the first instance please contact the Authorised Dealer who supplied the Product to you. In our experience many initial problems with machines that are thought to be due to faulty parts are actually solved by correct setting up or adjustment of the machines. A good Authorised Dealer should be able to resolve the majority of these issues much more quickly than processing a claim under the guarantee.

2.2 Any damage to the Product resulting in a potential claim under the guarantee must be reported to the Authorised Dealer from which it was purchased within 48 hours of receipt.

2.3 If the Authorised Dealer who supplied the Product to you has been unable to satisfy your query, any claim made under this Guarantee should be made directly to Record Power or its Authorised Distributor (for details of the Authorised Distributor in your country please see your Product manual or check www.recordpower.info for details). The claim itself should be made in a letter setting out the date and place of purchase, and giving a brief explanation of the problem which has led to the claim. This letter should then be sent with proof of the purchase date (preferably a receipt) to Record Power or its Authorised Distributor. If you include a phone number or email address this will help to speed up your claim.

2.4 Please note that it is essential that the letter of claim reaches Record Power or its Authorised Distributor on the last day of this Guarantee at the latest. Late claims will not be considered.

3 Limitation of Liability

3.1 We only supply Products for domestic and private use. You agree not to use the Product for any commercial, business or re-sale purposes and we have no liability to you for any loss of profit, loss of business, business interruption or loss of business opportunity.

3.2 This Guarantee does not confer any rights other than those expressly set out above and does not cover any claims for consequential loss or damage. This Guarantee is offered as an extra benefit and does not affect your statutory rights as a consumer.

4 Notice

This Guarantee applies to all Products purchased from an Authorised Dealer of Record Power within the United Kingdom of Great Britain and Northern Ireland. Terms of Guarantee may vary in other countries – please check with the Authorised Distributor in your country (details of the Authorised Distributor for your country can be found in the manual or at www.recordpower.info).

4. Getting to Know Your Disc Sander

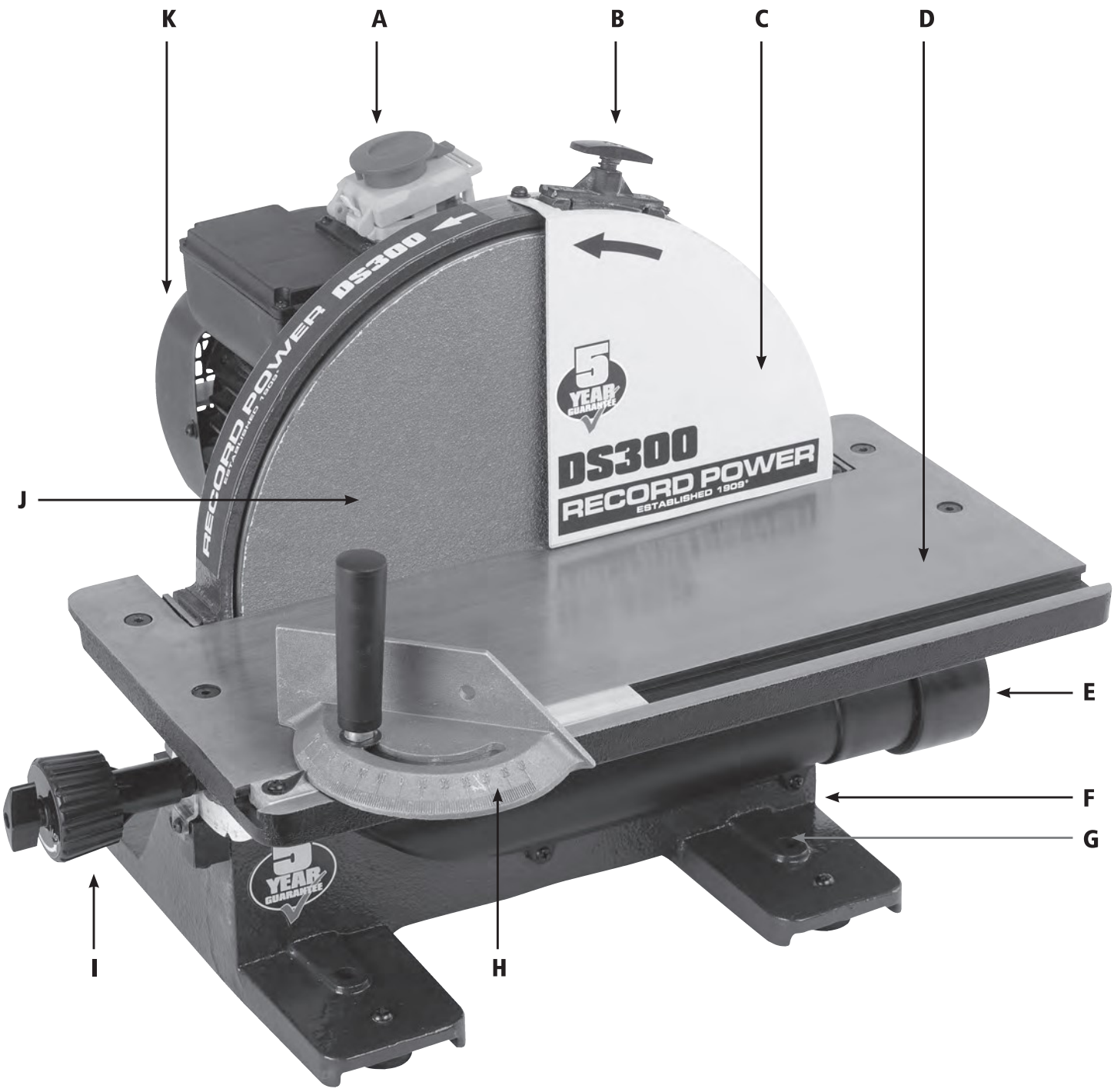

A On / off switch

B Disc brake

C Safety guard

D Table

E Dust extraction port

F Base

G Mounting holes
(2 further corresponding holes are located at the rear of the base)

H Mitre fence

I Table tilt mechanism and controls

J Sanding disc

K Motor

5. Specifications

Disc size:	305 mm
Table tilt:	45°
Table size:	435 x 165 mm
Disc speed:	1420 rpm
Motor:	230 V / 50 Hz / 1 hp / 750 W
Full load current:	4.5 A
Weight:	33 kg
Size:	H400 x W510 x D450 mm
Noise emission:	Sound power level <85 dBA
	Sound pressure level <85 dBA

6. Contents of the Package

Please check to make sure the following parts are included:

A **DS300** 12" Cast Iron Disc Sander
B Mitre fence
C Disc brake
D 57 to 63.5 mm (2.5") dust port adaptor
E 2.5 mm hex wrench*
F 4 mm hex wrench*

* The hex wrenches may be stored in the tool holder at the rear of the machine, **Fig 6.1.**

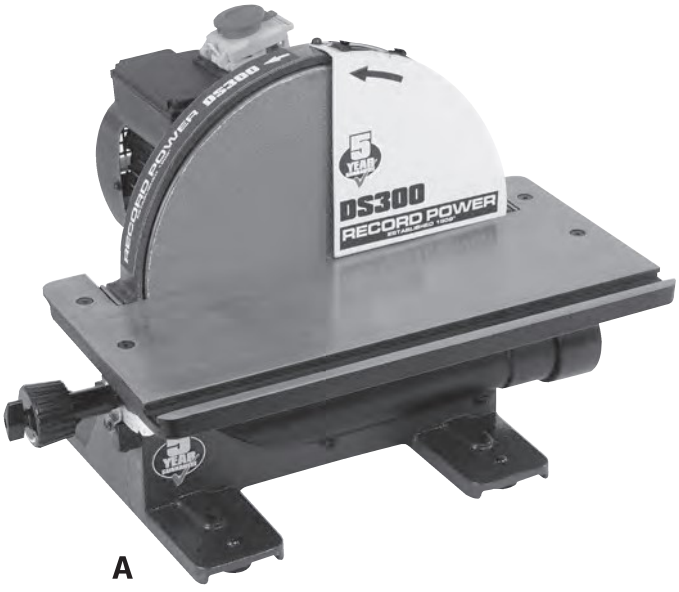

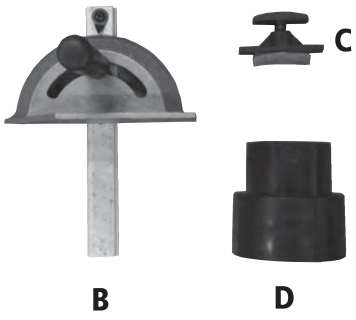

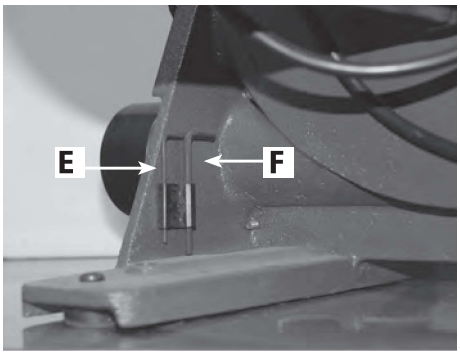

Fig 6.1.

7. Assembly

The DS300 is supplied partially assembled and only the disc brake, mitre fence and dust port adaptor (if required) need to be fitted to complete assembly.

Fitting the Disc Brake

Remove the 2 hex head socket screws from either side of the hole in the top of the machine, **Fig. 7.1**. Place the disc brake in position and secure in place by refitting the hex head socket screws, **Fig. 7.2**.

Fitting the Mitre Fence

The mitre fence is supplied assembled. To fit the mitre fence to the machine, slide the fence bar into the slot at the front of the table, **Fig 7.3**.

Fitting the Dust Port Adaptor

The 57 mm dust extraction outlet is located beneath the table. To fit the adaptor, slide it into the existing outlet, **Fig. 7.4**. This will allow the connection of 63.5 mm (2.5") hose to the machine. To connect the machine to a Record Power (or other 100 mm) dust extraction system, the optional **DX100R57** 100 - 57 mm Reducer for HPLV Dust Extractors should be used.

Securing Sander Base Assembly to a Workbench

The DS300 should be secured to a stable work surface when in use to minimise vibration and movement. There are 4 holes in the base of the disc sander, on the front and rear feet. Drill 4 10 mm holes in the work surface and secure the machine with M8 nuts and bolts (not supplied) of an appropriate length to suit the work surface.

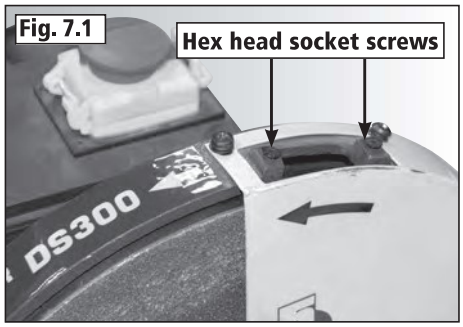

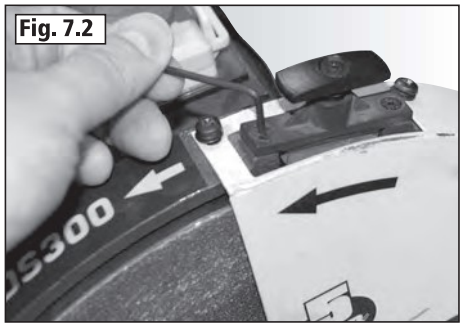

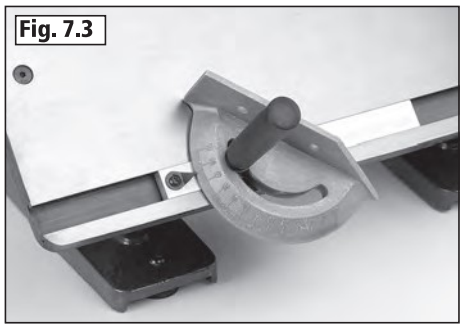

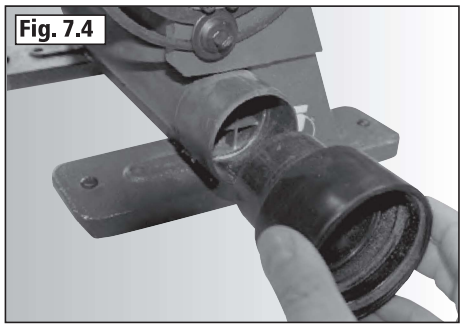

8. Operation

Sanding

Please take note of the disc rotation (anti-clockwise) as indicated by the arrow on the safety guard. Only work on the left hand side of the disc, **Fig 8.1**. Applying the workpiece to the left hand side of the disc will cause downward pressure of the workpiece against the table, greatly reducing the chance of it being thrown from the machine. Move the workpiece from left to right whilst sanding to ensure even wear to the disc.



Warning: Applying the workpiece to the right hand side of the disc could cause workpiece to be thrown from the machine and result in injury. For this reason the machine should not be operated without the safety guard in place.

Sanding at an Angle

The work table can be tilted from 0 to 45º to allow for for sanding at an angle, **Fig. 8.2**. To tilt the table, loosen the table lock knob and adjust to the desired angle using the table tilt knob then re-tighten the table lock knob, **Fig 8.3**.

In addition, there are 3 angle stops on the machine which allow it to be easily located at 0º (90º to the table), 22.5º and 45º when locked into the sprung ball bearing, see **Fig. 8.3**.

Using the Mitre Fence

The mitre fence should be used when an accurate angle is required on the face of workpiece to be sanded. The fence can be adjusted over a 120º range, from 0 to 60º and 0 to -60º, **Fig. 8.4**.

Using the Disc Brake

The DS300 is equipped with a manual disc brake which can be applied by pressing down on the brake handle, **Fig 8.5**. Only gentle pressure need be applied and the brake should only be used after the machine has been turned off.



Warning: Never apply the disc brake with the machine switched on as damage to the brake or disc may occur.

In the Event of a Blockage or if the Machine Stalls

If the machine stalls during use, the likely cause is excessive pressure being applied to the sanding disc. Simply removing the work piece from the sanding disc will usually allow the disc to run back up to speed.

In the event that the machine stalls due to a blockage that prevents the disc from rotating (for example, if a foreign body becomes trapped between the table and moving disc) immediately switch the machine off by pressing the red button marked 'O' on the switch and disconnect from the electricity supply.

Locate and rectify the source of the blockage and then turn the disc by hand to check that it rotates freely.

To re-start the machine re-connect the electricity supply and press the green button marked 'I' on the switch.

In the Event of a Power Failure

The disc sander is fitted with a no volt release (NVR) switch to protect the user against automatic starting of the machine when power is restored after a power failure.

In the event of a power failure, first locate and rectify the source of the failure. If the fault is within the power circuit of the workshop, there may be an underlying cause (circuit overload etc.) that should be investigated by a qualified electrician, before attempting to restore the power source.

Once the power is restored, the machine can be re-started by pressing the green button marked 'I' on the switch.



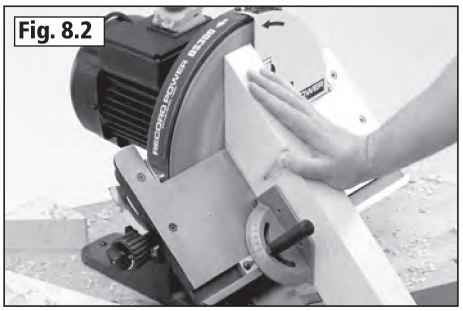

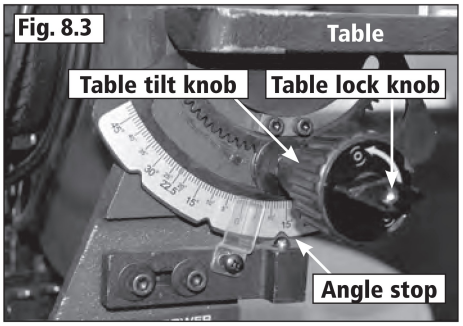

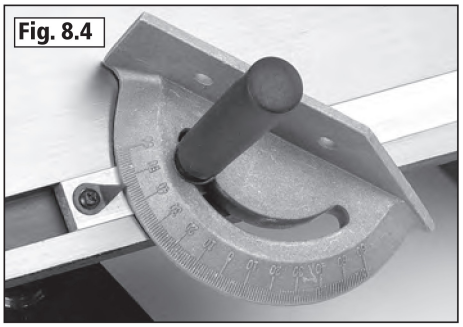

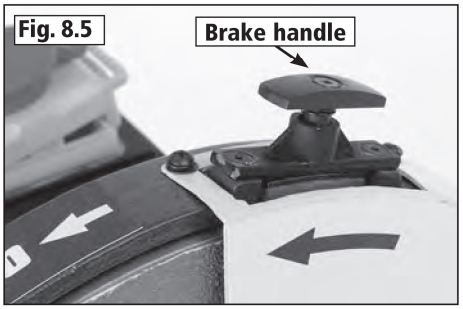

9. Maintenance & Adjustments

Setting the Table at 90° to the Sanding Disc

The table stops have been pre-set at the factory and should not need adjustment. If the table is knocked out of alignment follow the instructions below to reset.

Loosen the table lock knob, **Fig 9.1** ,and move table into the 0° position so that it rests at 90° to the sanding disc. Use an engineer's square to confirm the correct angle, **Fig. 9.2**. Retighten the table lock knob to secure the table in position.

Depending on the level of adjustment required to the table, the table stops and angle indicator may need to be repositioned. Firstly, move the angle stops so that the sprung ball bearing is resting in the notch of the plate that holds the angle scale, **Fig. 9.1**. To do this, loosen the 2 hex head socket screws which hold the stop bar in place and move the stop bar to the correct position, **Fig. 9.3**. It may be necessary to withdraw the ball bearing to allow the notch to be moved over it. This can be done by unscrewing the blind set screw located beneath the ball bearing on the underside of the stop bar, **Fig. 9.4**. Once the notch is positioned correctly, adjust the blind set screw to raise the ball bearing into position.

The angle indicator can now be respositioned to point to 0° by loosening its holding screw to allow movement. Once in the correct position, retighten the holding screw, **Fig. 9.3**.

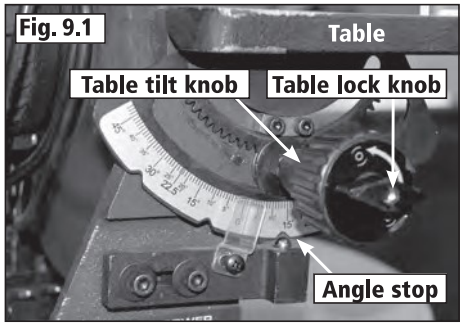

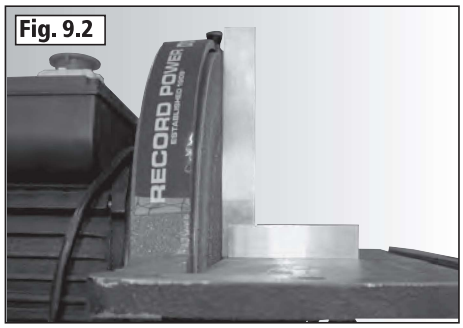

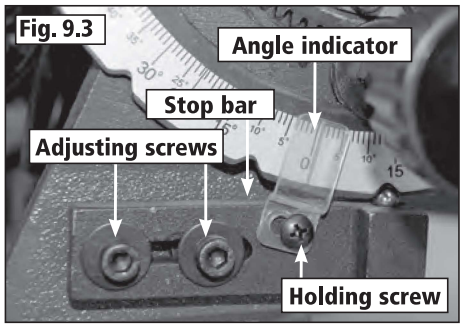

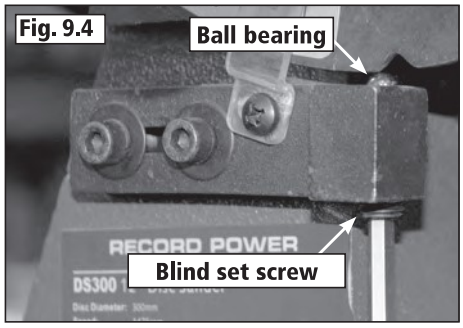

9. Maintenance & Adjustments

Aligning the Table with the Sanding Disc



WARNING: To avoid jamming the workpiece or fingers between the table and sanding surface, the inner table edge should be a maximum of 2 mm from the sanding surface.

Always maintain a maximum gap of 2 mm between the inner table edge and disc. If adjustment is necessary then remove the safety guard by removing the 3 Phillips head screws from the guard, **Fig. 9.5**, and loosen the four socket head screws on the surface of the table, **Fig 9.6**. Using two 2 mm drill bits (or other suitable items) as spacers, place the first drill bit between the disc and the inside edge of the table at the left hand side of the disc and hold in place. Now place the second drill bit between the disc and the table at the right hand side of the disc and push the table towards the disc so it wedges both drill bits against the disc, leaving a uniform gap of 2mm across the length of the disc, **Fig. 9.7**. The hex head socket screws can now be retightened.

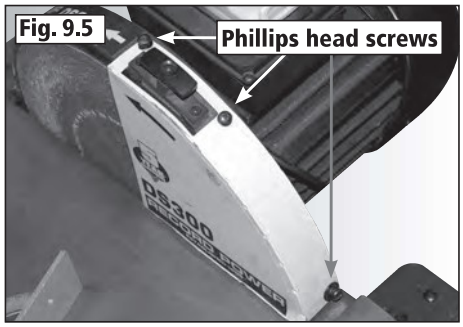

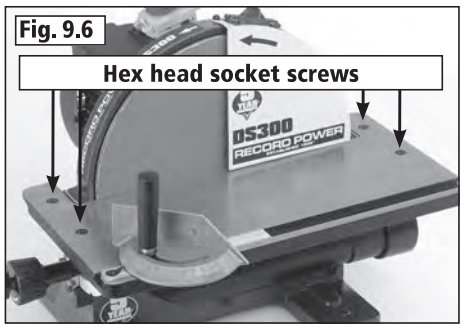

Replacing the Sanding Disc

Remove the safety guard to gain access to as much of the disc as possible. To give maximum clearance between the table and the disc, tilt the table to 45º. This will make application of the new sanding disc an easier task, **Fig. 9.8**. Carefully peel the backing from the new self-adhesive sanding disc. Align the disc with the edge of the backing plate and carefully press it firmly into position on the backing plate.

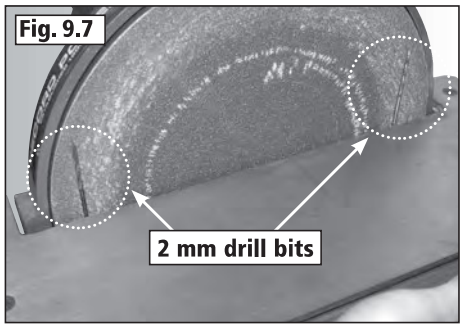

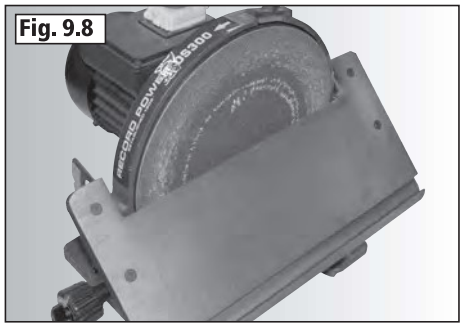

10. Dust Extraction

The Importance of Dust Extraction
Suitable dust extraction is essential to avoid the possibility of serious health problems related to wood dust. It is also necessary in order to ensure the waste producing machine performs safely and effectively. Some woods are extremely toxic and in addition to suitable dust extraction machines it is recommended that PPE such as respirators are also used.

Record Power Dust Extraction Machines
Below is a summary of the Record Power range. Please visit your local stockist or go online for full details.

CGV286 CamVac Series Compact Extractor
36 litre capacity, 1 kW single or twin motor, 0.5 micron filtration. Includes hose.

CGV286-3-WALL CamVac Series Wall Mounted Extractor
150 litre capacity, twin motor, 0.5 micron filtration. Includes hose.

CGV336 CamVac Series Medium Extractor
55 litre capacity, 1 kW single or twin motor, 0.5 micron filtration. Includes hose.

CGV386 CamVac Series Large Extractor
90 litre capacity, 1 kW twin or triple motor, 0.5 micron filtration. Includes hose.

CGV486 CamVac Series Heavy Duty Extractor
200 litre capacity, 1 kW triple motor, 0.5 micron filtration. Includes hose.

DX1000 Fine Filter 45 Litre Extractor
45 litre capacity, 1 kW motor, 0.5 micron filtration. Includes hose. Includes hose.

AC400 2 Stage Air filter with Remote, 3 speeds and Time Delay
Collects airborne dust, 1 micron filtration.

	Bandsaws	Table Saws	Planer Thicknessers	Lathes	Sanding Machines	Dust Extraction Systems	Airborne Dust Collection
DX1000	✓	✓	✓	✓	✓		
CGV286	✓	✓	✓	✓	✓		
CGV286-3-WALL	✓	✓	✓	✓	✓	✓	
CGV336	✓	✓	✓	✓	✓		
CGV386	✓	✓	✓	✓	✓	✓	
CGV486	✓	✓	✓	✓	✓	✓	
AC400							✓

11. Troubleshooting

Problem	Possible Cause	Solution
Sander will not start	1. Sander is unplugged 2. Fuse blown or circuit breaker tripped 3. Cord damaged	1. Check all plug connections 2. Replace fuse or reset circuit breaker 3. Replace cord
Sanding disc does not come up to speed	1. Extension cord too tight or too long 2. Low current	1. Replace with adequate size and length cord 2. Contact a qualified electrician
Machine vibrates excessively	1. Stand or base is on an uneven surface	1. Place stand or base on an even surface or bolt it down
Sanded edge is not square	1. Table not square to sanding disc	1. Use a square to adjust the table
Sanding marks on wood	1. Work held still 2. Wrong grit sanding disc 3. Feed pressure too great	1. Keep workpiece moving 2. Use coarser grit for stock removal and fine grit for finishing 3. Never force the workpiece

12. Electrical Connection & Wiring Diagram

Machines supplied for use in the UK are fitted with a 3 pin plug conforming to BS1363, fitted with a fuse conforming to BS1362 and appropriate to the current rating of the machine.

Machines supplied for use in other countries within the European Union are fitted with a 2 pin Schuko plug conforming to CEE 7/7.

Machines supplied for use in Australia & New Zealand are fitted with a 3 pin plug conforming to AS/NZS3112.

In all cases, if the original plug or connector has to be replaced for any reason, the wires within the mains power cable are colour coded as follows:

230 V (Single Phase)

Brown:	Live (L)
Blue:	Neutral (N)
Green and Yellow:	Earth (E)

The wire coloured brown must always be connected to the terminal marked 'L' or coloured red.

The wire coloured blue must always be connected to the terminal marked 'N' or coloured black.

The wire coloured green and yellow must always be connected to the terminal marked 'E' or with the earth symbol:



or coloured green / green and yellow.

It is important that the machine is effectively earthed. Some machines will be clearly marked with the double insulated logo:



In this case there will not be an earth wire within the circuit.

In the case of the BS1363 plug for use in the UK, always ensure that it is fitted with a fuse conforming to BS1362 appropriate to the rating of the machine. If replacing the original fuse, always fit a fuse of equivalent rating to the original. Never fit a fuse of a higher rating than the original. Never modify the fuse or fuse holder to accept fuses of a different type or size.

Where the current rating of the machine exceeds 13 A at 230 V, or if the machine is designated for use on a 400 V 3 phase supply a connector conforming to BS4343 (CEE17 / IEC60309) will be used.

230 V machines will be fitted with a blue 3 pin connector. The wiring for this type of this connector will be the same as shown above.

400 V, 3 phase machines will be fitted with a red 4 or 5 pin connector. The wiring for this type of connector is as shown below:

400 V (3 phase)

Brown:	Live (L1)
Black:	Live (L2)
Grey:	Live (L 3)
Blue:	Neutral (N)
Green and Yellow:	Earth (E)

The wire coloured brown must always be connected to the terminal marked 'L1'.

The wire coloured black must always be fitted to the terminal marked 'L2'.

The wire coloured grey must always be connected to the terminal marked 'L3'.

The wire coloured blue must always be connected to the terminal marked 'N' or coloured black.

The wire coloured green and yellow must always be connected to the terminal marked 'E' or with the earth symbol

If in doubt about the connection of the electrical supply, always consult a qualified electrician.

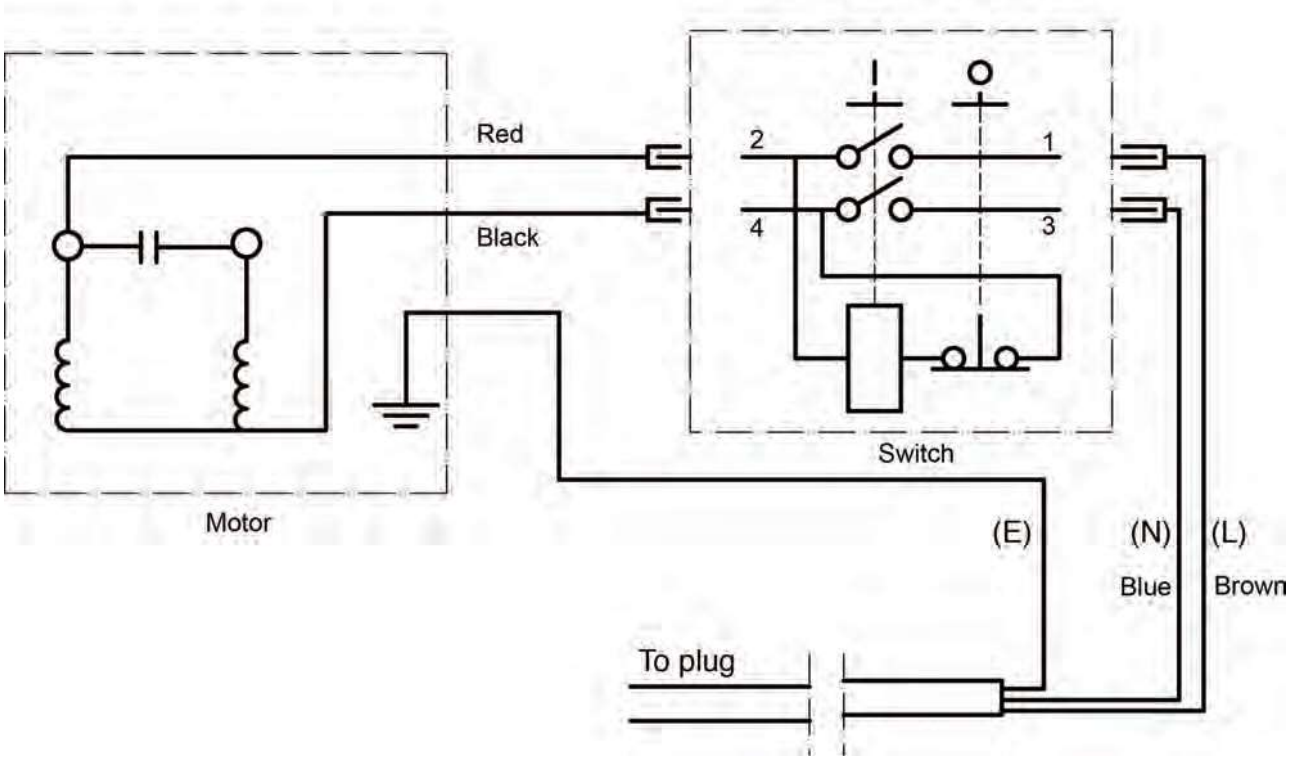

13. Parts List & Diagram

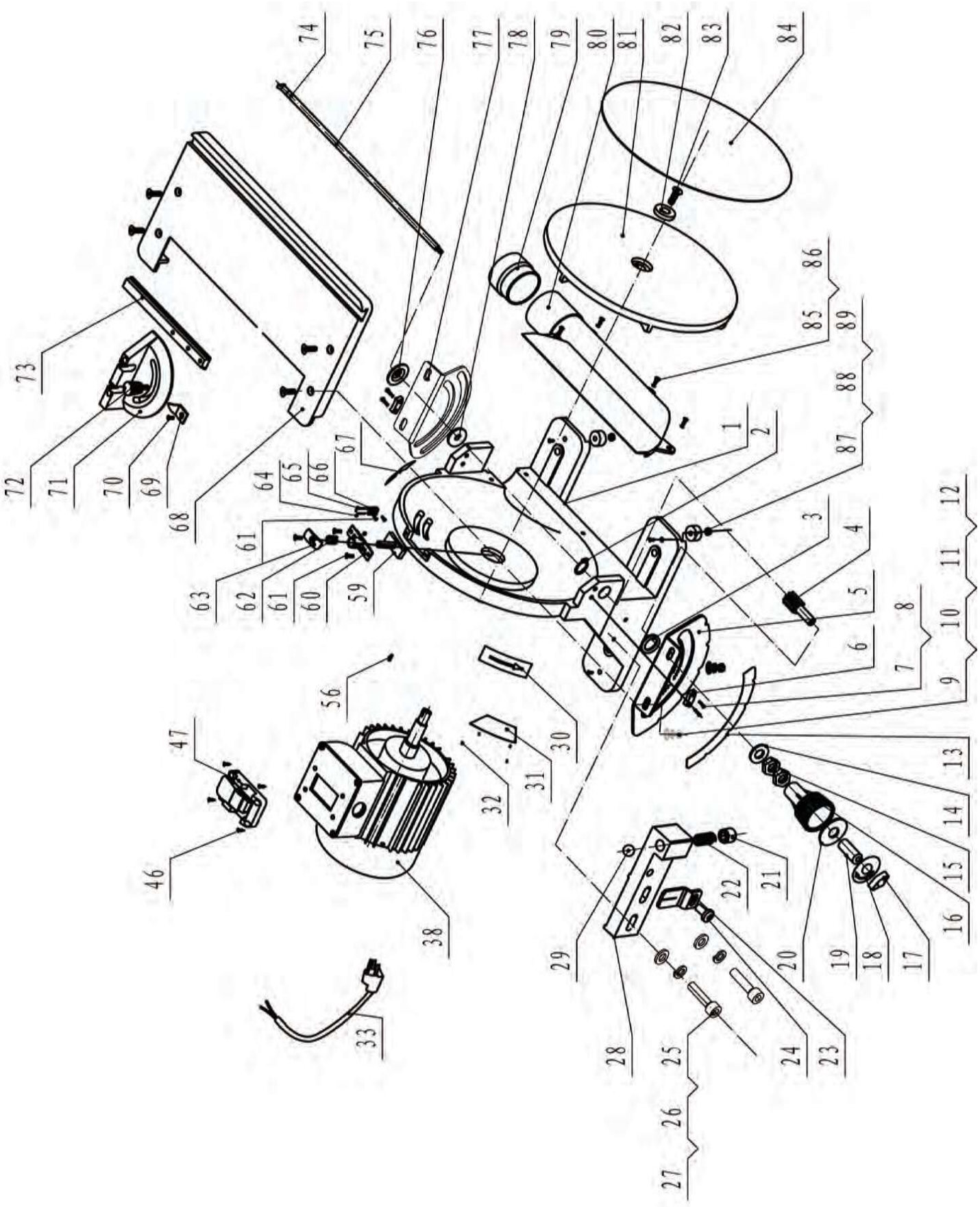

13. Parts List & Diagram

Part Number	Description
1	Base
2	Retaining ring
3	Washer
4	Gear shaft
5	Front trunnion
6	Guide block
7	Bolt
8	Spring washer
9	Screw
10	Washer
11	Spring washer
12	Hex nut
12	Scale
14	Washer
15	Hex nut
16	Adjusting handle
17	Lock knob
18	Lock label
19	Adjusting tube
20	Handle cap
21	Set screw
22	Spring
23	Pointer
24	Screw
25	Bolt
26	Washer
27	Spring washer
28	Mounting base
29	Ball 8mm
30	Rotate label
31	Warning label
32	Rivet
33	Cable
38	Motor shield
46	Screw
47	Switch
56	Key

Part Number	Description
59	Brake assembly
60	Brake bracket
61	Screw
62	Brake spring
63	Brake handle
64	L wrench 2.5 mm
65	L wrench 4 mm
66	Tool holder
67	Nameplate
68	Table
69	Pointer
70	Screw
71	Mitre fence body
72	Lock knob
73	Guide block
74	"O" rubber ring
75	Lock shaft
76	Washer
77	Rear trunnion
78	Washer
79	57 to 63.5 mm (2.5") adaptor
80	Dust extraction outlet
81	Disc body
82	Washer
83	Screw
84	Sand paper
85	Pan head screw
86	Dentiform washer
87	Pan head screw
88	Rubber washer
89	Hex. nut

EC Declaration of Conformity

Cert No: EC / DS300 / 3

Record Power Ltd, Centenary House, 11 Midland Way, Barlborough Links, Chesterfield, Derbyshire, S43 4XA, United Kingdom

declares that the machinery described:

1. Type: **Disc Grinder**

2. Model No: **DS300**

3. Serial No: **Engineering Sample**

Will conform with the following standards:

MACHINERY DIRECTIVE:	2006/42/EC
ADDITIONAL USED EC DIRECTIVES:	EMC Directive 2014/30/EU
USED HARMONIZED STANDARDS:	EN 62841-1:2015 IEC 62841-1: 2014 (First Edition) + C1:2014 EN 55014-1: 2017 EN 55014-2: 2015 EN IEC 61000-3-2:2014 EN 61000-3-3:2013

CE

and complies with the relevant essential health and safety requirements and conforms to the machinery example for which the EC Type-Examination certificate numbers **M8A171274171011** and **E8A180674171013** have been issued at:
TÜV SÜD Product Service GmbH, Zertifizierstelle, Ridlerstraße 65, 80339 München, Germany

Signed.....Dated: **06/05/2021** – Chesterfield / U.K.
Andrew Greensted
Managing Director

Technical file held by Andrew Greensted, Record Power Ltd, Centenary House, 11 Midland Way, Barlborough Links, Chesterfield, Derbyshire, S43 4XA, United Kingdom

EC	REP	Record Power B.V., Verlengde Poolseweg 16, 4818 CL BREDA, Netherlands, Tel: +31 76 52 44 766

UKCA Declaration of Conformity

Cert No: UKCA / DS300 / 1

Record Power Ltd, Centenary House, 11 Midland Way, Barlborough Links, Chesterfield, Derbyshire, S43 4XA, United Kingdom

declares that the machinery described:

1. Type: **Disc Grinder**

2. Model No: **DS300**

3. Serial No: **Engineering Sample**

Will conform with the following standards:

MACHINERY DIRECTIVE:	2006/42/EC
ADDITIONAL USED EC DIRECTIVES:	EMC Directive 2014/30/EU
USED HARMONIZED STANDARDS:	EN 62841-1:2015 IEC 62841-1: 2014 (First Edition) + C1:2014 EN 55014-1: 2017 EN 55014-2: 2015 EN IEC 61000-3-2:2014 EN 61000-3-3:2013

and complies with the relevant essential health and safety requirements and conforms to the machinery example for which the EC Type-Examination certificate numbers **M8A171274171011** and **E8A180674171013** have been issued at:
TÜV SÜD Product Service GmbH, Zertifizierstelle, Ridlerstraße 65, 80339 München, Germany

Signed.....Dated: **19/08/2021** – Chesterfield / U.K.
Andrew Greensted
Managing Director

Technical file held by Andrew Greensted, Record Power Ltd, Centenary House, 11 Midland Way, Barlborough Links, Chesterfield, Derbyshire, S43 4XA, United Kingdom



RECORD POWER
ESTABLISHED 1909®

Woodworking Machinery and Accessories

Record Power Ltd, Centenary House, 11 Midland Way, Barlborough Links, Chesterfield, Derbyshire S43 4XA
Tel: +44 (0) 1246 571 020 Fax: +44 (0) 1246 571 030 www.recordpower.co.uk

To register a product and find your local stockist visit

recordpower.info

Made in China