trend®
tool technology

# T32


| | | |
|---|---|---|
| **EN** | *Original Instructions* | *P.4* |
| **DE** | *Übersetzung Der Originalanleitung* | *P.13* |
| **FR** | *Traduction Des Instructions Originales* | *P.22* |
| **NL** | *Vertaling Van De Originele Instructies* | *P.31* |
| **DK** | *Oversættelse Af De Originale Instruktioner* | *P.40* |
| **SE** | *Översättning Av De Ursprungliga Instruktionerna* | *P.48* |
| **NO** | *Oversettelse Av De Originale Instruksjonene* | *P.56* |
| **FI** | *Alkuperäisten Ohjeiden Suomennos* | *P.64* |




Fig. 1

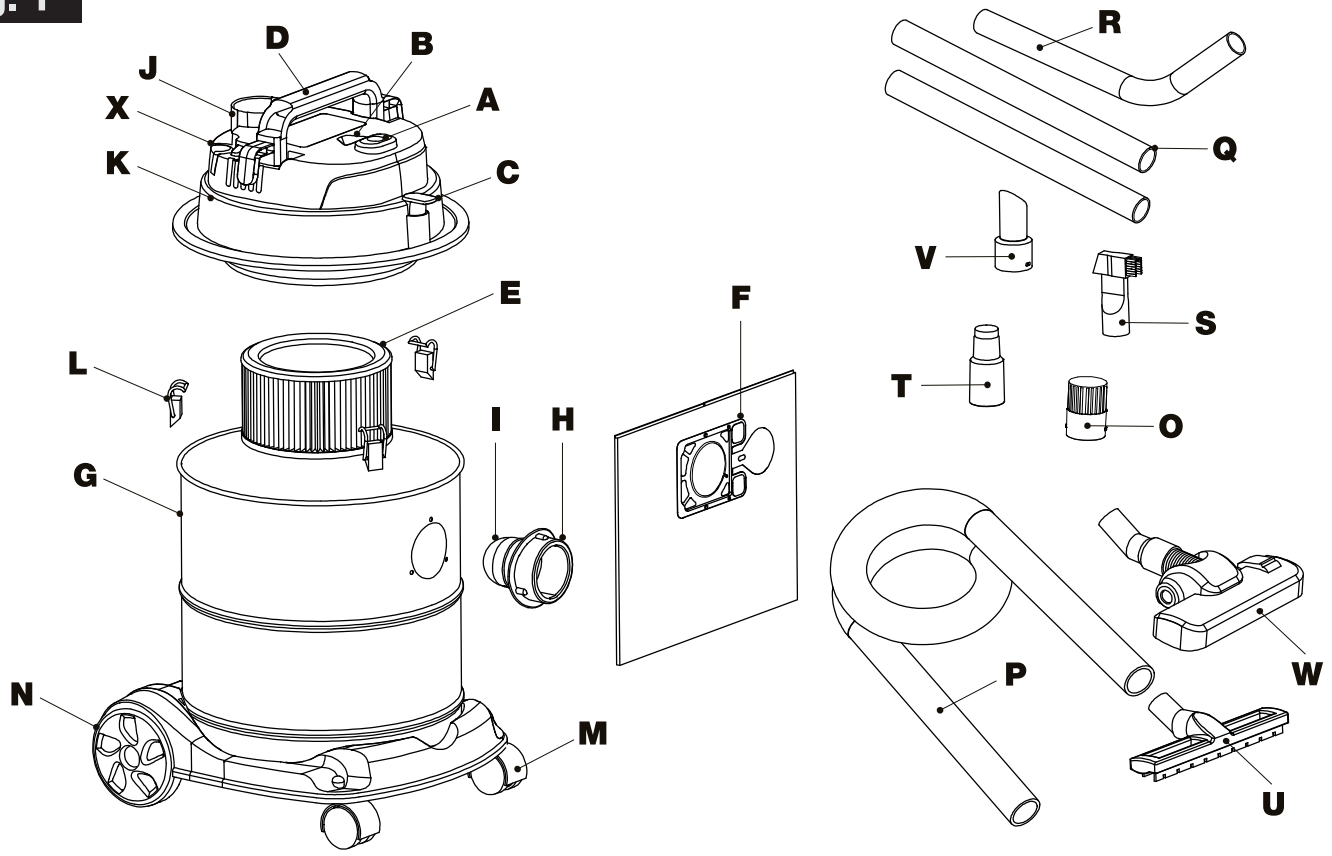


Fig. 2a

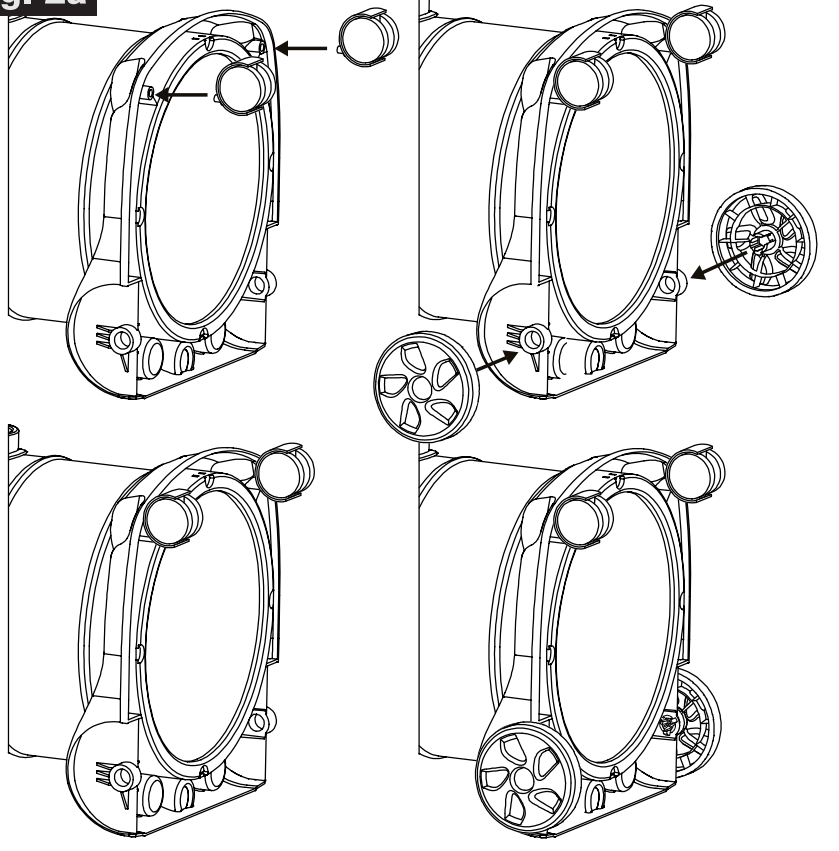

Fig. 3

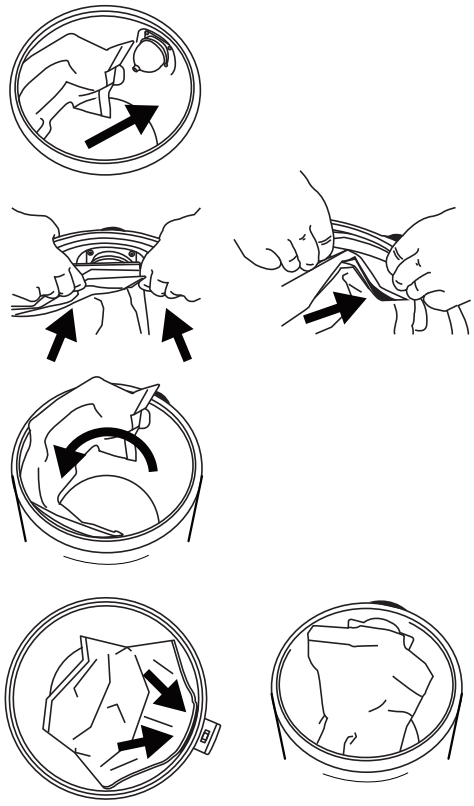

Fig. 4

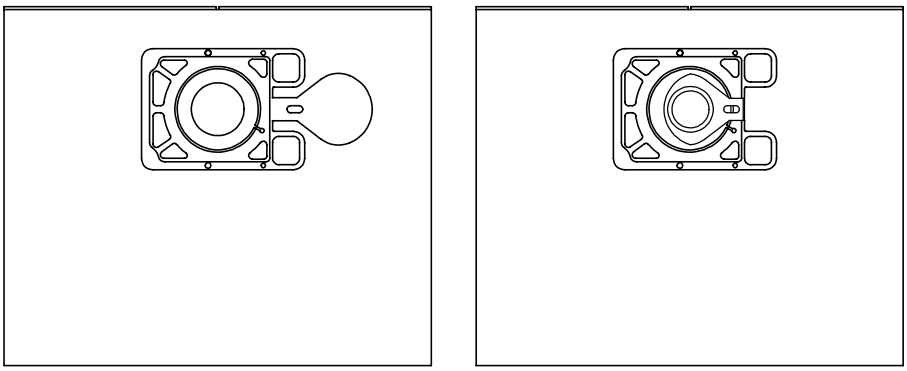

Fig. 5

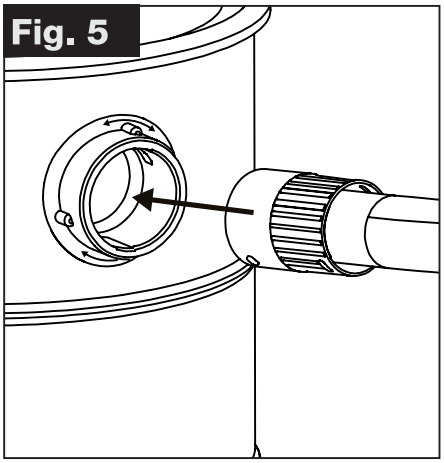

Fig. 5a

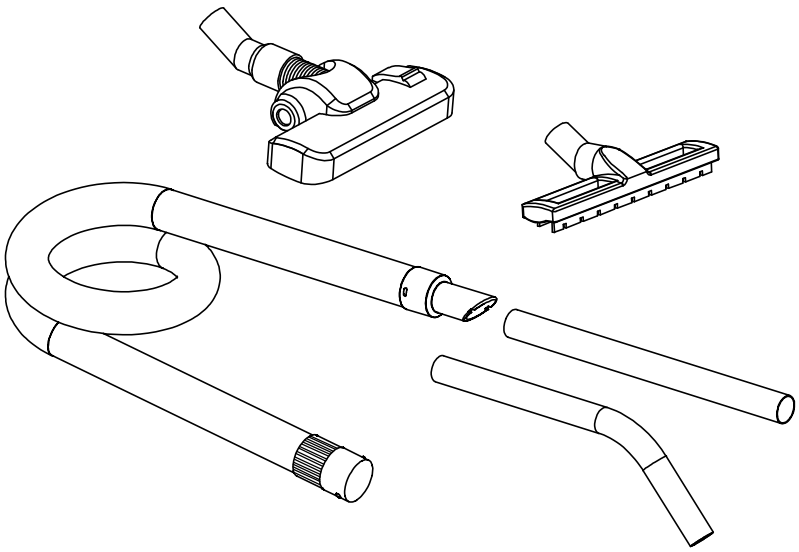

Fig. 6

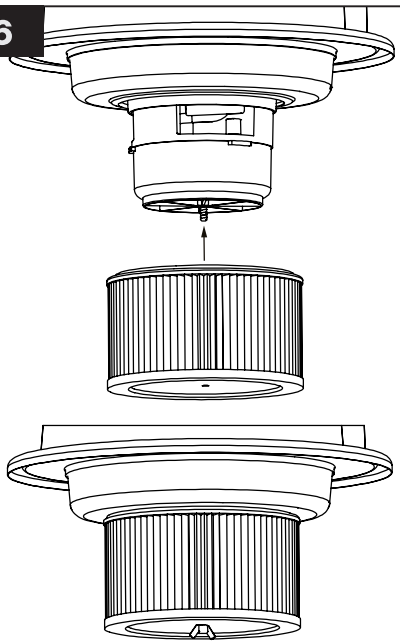

Fig. 7

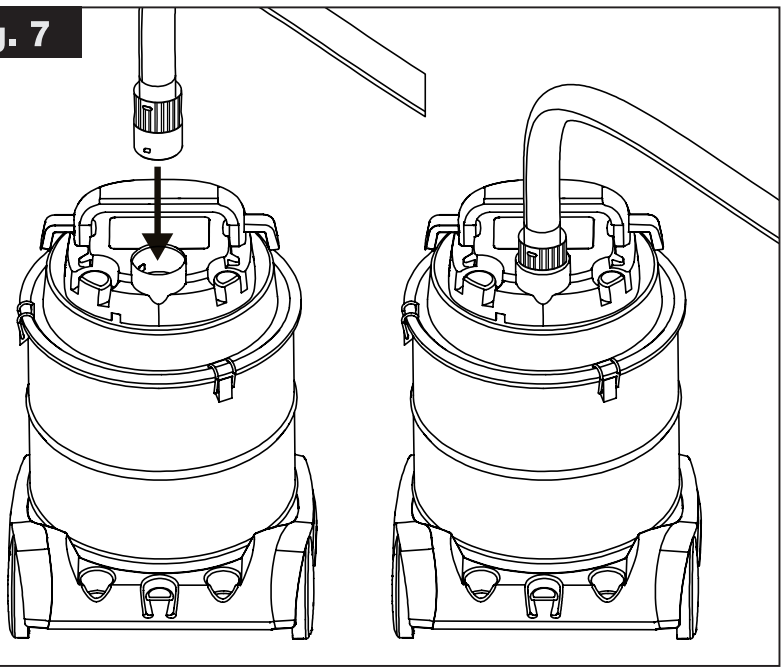

Fig. 8

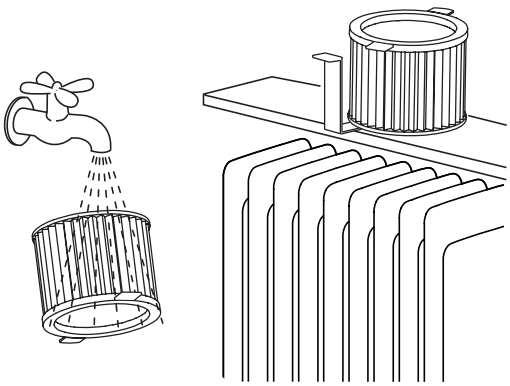

# EN – T32

Thank you for purchasing this Trend product, we hope you enjoy many years of creative and productive use.

Please remember to return your guarantee card within 28 days of purchase.

## ⚠ CAUTION:

Read the instructions before using the machine

**Definitions: Safety Guidelines**

The definitions below describe the level of severity for each signal word. Please re ad the manual and pay attention to these symbols.

The following symbols are used throughout this manual:

## ⚠ WARNING:

indicates a potential hazardous situation which, if not avoided, **could** result in **death or serious injury**.

## ⚠ CAUTION:

Indicates a potentially hazardous situation which, if not avoided, may result in **minor or moderate** injury.

**NOTICE:** Indicates a practice **not related** to **personal injury** which, if not avoided, **may** result in **property damage**.

 Denotes risk of electric shock.

 Denotes risk of fire.

**Additional Symbols Used**



Wear Personal Protective Equipment (PPE).
Ear, eye and respiratory protection must be worn.

 Denotes risk of personal injury, loss of life or damage to the tool in case or non-observance of the instructions in this manual.

 If you require further safety advice, technical information or spare parts, please call Trend Technical Support or visit www.trend-uk.com

## EC DECLARATION OF CONFORMITY

## MACHINERY DIRECTIVE

CE

## VACUUM CLEANER

## T32

Trend declares that the product described under Technical Data is in compliance with 2006/42/EC.

This product also complies with Directives 2014/35/EU, 2014/30/EU, 2011/65/EU EU666, 2009/125/EC, 1275/2009/EC and the following harmonised standards EN 60335-1, EN 60335-2-69, EN 62233:2008, EN 55014-1:2017, EN 55014-2:2015, EN 61000-3-2:2014, EN 61000-3-3:2013.

For more information please contact Trend at the following address or refer to back of manual. The undersigned make this declaration on behalf of Trend Machinery & Cutting Tools Ltd.



Technical Director
Neil McMillan

Trend Machinery & Cutting Tools Ltd
Unit 6 Odhams Trading Estate
St Albans Road, Watford
Herts, WD24 7TR
United Kingdom
25.02.2020

# VACUUM CLEANER
# T32
# TECHNICAL DATA

| | | | |
|---|---|---|---|
| Voltage | UK & Eire<br>Europe | $V_{AC}$<br>$V_{AC}$ | 230/115<br>230 |
| Power Input | 230v<br>115v | W<br>W | 800<br>800 |
| Frequency | | Hz | 50 |
| Flow rate | | l/s | 20 |
| Max. vaccum | | mbar | 146 |
| Filter surface | HEPA | cmq | 1850 |
| Negative pressure | | $K_{PA}$ | 14.6 |
| Dust category | | | M |
| Collection bag contents | | L | 15 |
| Container | | L | 20 |
| Noise | | dB | 80 |
| Hose | Length<br>Outside diameter | M<br>mm | 3<br>39 |
| Dimensions | Height x width | mm | 492 x 375 |
| Weight | | kg | 6.5kg |
| Vibration | | $m/s^2$ | <=2.5 |
| $L_{PA}$ | (emission sound pressure level) | dB(A) | <=70 |
| $K_{PA}$ | (uncertainty for the given sound level) | dB(A) | 1.5 |
| $L_{WA}$ | (sound power level) | dB(A) | 80 |
| $K_{WA}$ | (uncertainty for the given sound level) | dB(A) | 1.5 |

| **Fuses** | | |
|---|---|---|
| UK & Eire | 230V tools | 13 Amperes, in plug |
| UK & Eire | 115V tools | 16 Amperes, main |
| Europe | 230V tools | 16 Amperes, main |

## INTENDED USE

This machine is intended for collection, vacuuming, conveying and separation of non- flammable dry dusts and non-flammable liquids and water-air mixtures. This dust category class M vacuum cleaner is for professional use and is suited for trades and workshops.

According to IEC/EN 60335-2-69, vacuum of dust category M may only be used for vacuuming and extraction of hazardous dusts with an exposition limit value ≥ 0.1 mg/m3. Use vacuum cleaner only when you fully understand and can perform all functions without limitation, or have received appropriate instruction.

This appliance is suitable for commercial use, for example in hotels, schools, factories, shops and offices.

The appliance is intended for use as a dry vacuum cleaner only.

**DO NOT** let children come into contact with this appliance. Supervision is required when inexperienced operators use this appliance.



**WARNING: Ensure all filters are fitted.**

**WARNING: Operators shall be adequately instructed on the use of these machines.**

**WARNING: Do not allow the supply cord to come into contact with the rotating brushes.**

**WARNING: This machine is for dry use only.**

**WARNING: This machine is not suitable for picking up hazardous dust.**

**WARNING: The machine has to be disconnected from its power source during cleaning or maintenance and when replacing parts or converting the machine to another function for mains operated machines, by removing the plug from the socket-outlet**

**WARNING: Children should be supervised to ensure that they do not play with the appliance**

**CAUTION: This machine is for indoor use only.**

**CAUTION: This machine shall be stored indoors only.**

**CAUTION: Do not overload suction.**

**CAUTION: Clean filters daily.**

**CAUTION: Do not over fill bag.**

**DO NOT** use vacuum cleaner for combustible dust.

**DO NOT** use vacuum cleaner in explosive atmospheres.

This product is not intended for use by persons (including children) suffering from diminished physical, sensory or mental abilities; lack of experience, knowledge or skills unless they are supervised by a person responsible for their safety. Children should never be left alone with this product.

## Electrical Safety

## Power Supply

**WARNING:**

**Before any maintenance work, isolate mains plug from power source**

The electric motor has been designed for one voltage only. Always check that the power supply corresponds to the voltage on the rating plate. Machines marked for 230 volt can also be operated from a 220 volt supply. The vacuum cleaner is supplied from the factory with mains supply power cord/cable, which has an earthed plug. It must only be connected to an approved earthed socket.

## Mains Plug Replacement (UK & Ireland only)

Always check the condition of the cable and plug before starting with your work. Should your mains plug need replacing and you are competent to do this, proceed as instructed below. If you are in doubt, contact an authorised Trend repair agent or a qualified electrician.

- Disconnect the plug from the supply.
- Cut off the plug and dispose of it safely; a plug with bared copper conductors is dangerous if engaged in a live socket outlet.
- Only fit 13 Amperes BS 1363A approved plugs fitted with a 13 Amp A.S.T.A approved BS 1362 fuse (1).
- The cable wire colours, or a letter, will be marked at the connection points of most good quality plugs. Attach the wires to their respective points in the plug (see below). Brown is for Live (L) (2) and Blue is for Neutral (N) (3).
- Before replacing the top cover of the mains plug ensure that the cable restraint (4) is holding the outer sheath of the cable firmly and that the two leads are correctly fixed at the terminal screws.

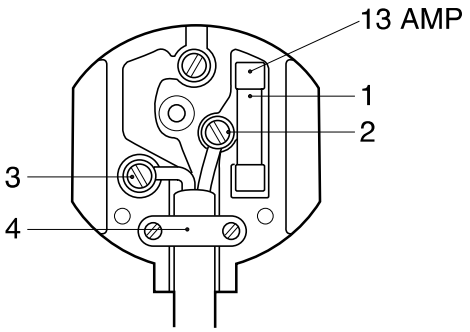


For 115V units with a power rating exceeding 1500W we recommend to use a plug to BS4343 standard.

**WARNING:**

**Never connect to a light socket. Never connect the live (L) or neutral (N) wires to the earth pin marked E or ⏚.**

## Using an Extension Cable

- If an extension cable is required, use an approved triple core extension cable suitable for the power input of this tool (see technical data). The minimal conductor size is 1.5mm2, the maximum length is 30m.
- When using a cable reel, always unwind the cable completely.

**WARNING:**

**115V units have to be operated via a fail-safe isolating transformer with an earth screen between the primary and secondary windings.**

**WARNING:**

**To reduce the risk of injury, read the instruction manual.**

## VACUUM CLEANING SAFETY

### Important Safety Instructions

**⚠ WARNING!**

**Read all safety warnings and all instructions. Failure to follow the warnings and instructions may result in electric shock, fire and/or serious injury.**

**SAVE ALL WARNINGS AND INSTRUCTIONS FOR FUTURE REFERENCE. BEFORE USING THE APPLIANCE, READ AND FOLLOW ALL INSTRUCTIONS.**

**⚠ WARNING:**

**Operators should be adequately instructed on the use of these machines.**

**⚠ WARNING:**

**To reduce the risk of electric shock. Do not expose to rain. Store indoors.**

- Components used for packaging (e.g. plastic bags) can be dangerous, keep away from children and animals.
- Operators should be adequately instructed on the use of this machine.
- Before use, operators shall be provided with information, instruction and training for the use of the machine and the substances for which it is to be used, including the safe method of removal and disposal of the material collected.
- Operators should observe any safety regulations appropriate to the materials being handled.
- Never leave the equipment unattended whilst in use. Do not leave the appliance when it is connected to a power source. Unplug it from outlet when not in use and before servicing. Turn off all controls before unplugging appliance.
- The appliance is not to be used by children or persons with reduced physical, sensory or mental capabilities, or lack of experience and knowledge, unless they have been given supervision or instruction.
- Children should not play with the appliance, it is not a toy.
- Use this appliance only as described in the manual.
- The use of this machine for anything not specified in this manual may be dangerous and must be avoided.
- Only use the socket outlet on the appliance for purposes specified in the instruction manual.
- Always check the appliance before use.
- The suction nozzle should be kept away from the body, especially delicate areas such as eyes, ears and mouth.
- Do not unplug this appliance by pulling on the power cord. To unplug, grasp the plug, not the power cord.
- Do not pull or carry this appliance by the power cord. Do not use the power cord as a handle, close a door on the power cord, or pull the power cord around sharp edges or corners. Do not run the appliance over the power cord. Keep power cord away from heated surfaces.
- Do not handle the plug or appliance or grasp power cord with wet hands.
- Do not put any objects into the openings of the appliance. Do not use the appliance with any opening blocked. Keep openings free of dust, lint, hair and anything else that may reduce airflow and cause a blockage.
- Keep hair, loose clothing, fingers, and all body parts away from the openings and moving parts of the appliance.
- Static shocks are possible in dry areas or when the relative humidity of the air is low. This is only temporary and does not affect the use of the vacuum. To reduce the frequency of static shocks, add moisture to the air with a console or installed humidifier.
- To avoid spontaneous combustion, empty canister after each use.
- Take extra care if cleaning on stairs.
- The equipment should be correctly assembled before use.
- Ensure that power sockets used are correct for the machine.
- Check that voltage indicated on the rating plate is the same as the supply voltage.
- These machines are not suitable for vacuuming health endangering dusts or inflammable/explosive substance (like ash and soot).
- Never carry out any maintenance on the machine without first disconnecting from the mains supply or when is left unattended or reachable by children or disables.
- The machine should never be immersed and never use water jet against the appliance to clean it.
- Periodically examine the power cord and machine for damage. If any damage is found, do not use the appliance but contact your service centre for repair.
- If the power supply cord is damaged, it must be replaced by the manufacturer, its service centres or similarly qualified people in order to avoid a hazard.
- If an extension cord is used, the plug and socket must be of watertight construction.
- If the machine overturns, it would be recommended to

stand it up before switching off.

- If foam or liquid escape from the appliance, switch off immediately.
- The equipment should not be used to vacuum water from containers, lavatories, tubs, etc.
- Before emptying the tank, switch off the machine and disconnect the plug from the power outlet.
- Aggressive solvents or detergents should not be used.
- Service and repairs must be carried out by qualified personnel only. Only use Trend original spare parts for service repair.
- The manufacturer cannot be held responsible for any damage/injury caused to persons, animals or property caused by misuse of the appliance.
- Use only Trend recommended attachments and Trend original spare parts.

**SAVE THESE INSTRUCTIONS**

## Additional Safety Rules



**WARNING:**

This appliance contains harmful dust. The emptying and maintenance, including the removal of the collection bag, may only be executed by trained personnel wearing suitable protection equipment. Do not switch on until the complete filter system has been installed. Otherwise there is danger to your own health.

- Do not pick up anything that is burning or smoking, such as hot ashes, matches or cigarettes.
- Do not use to vacuum combustible explosive materials, such as grain, coal or other finely divided combustible material.
- Do not use to vacuum hazardous, toxic or carcinogenic materials, such as asbestos or pesticide.
- Never pick up explosive liquids (e.g. paint thinner, gasoline, diesel fuel, heating oil etc.), acids or solvents.
- Do not use vacuum without filters in place, except as explained in the Wet Vacuuming section of this manual.
- Some woods contain preservatives which can be toxic. Take extra care to prevent inhalation and skin contact when working with these materials. Request and follow any safety information available from the supplier of the materials.
- Do not use vacuum cleaner as a seat, ladder or stepladder.
- Do not place heavy objects on vacuum cleaner.
- Do not hang the vacuum cleaner eg for transporting purposes.



Wear Personal Protective Equipment (PPE).
Ear, eye and respiratory protection must be worn.

## RESIDUAL RISKS

In spite of the application of the relevant safety regulations and implementation of safety devices, certain residual risks cannot be avoided.

These are:-

- Impairment of hearing.
- Risk of personal injury due to flying particles.
- Risk of burns due to accessories becoming hot during operation.
- Risk of personal injury due to prolonged use.

## MARKINGS ON TOOL

The following pictures are shown on the appliance.



Read instruction manual before use.



**WARNING:** This appliance contains harmful dust. The emptying and maintenance, including the removal of the collection bag, may only be executed by trained personnel wearing suitable protection equipment. Do not switch on until the complete filter system has been installed. Otherwise there is a danger to your own health.




Class M vacuum cleaners are suitable to vacuum dry, non-combustible dusts with workplace limit values of ≥ 0.1 mg/m3.

**WARNING:**

**The vacuum cleaner contains materials that are hazardous to one's health. Have the emptying and maintenance, including the disposal of dust-collection containers, carried out only by specialists. Appropriate protective equipment is required. Do not operate the vacuum cleaner without the complete filter system. Otherwise there is danger to your own health.**

## Date Code Position

The date code, which includes the year of manufacture, is printed on the rating plate that can be found on the appliance top housing.

## ITEMS ENCLOSED

1 x Cartridge Filter HEPA H13
2 x Castors
2 x Main Wheels
1 x Container
1 x Synthetic Collection Bag
1 x Hose 3m x 39mm Ø with Hose Spout
2 x Extension Tubes
1 x Curved Metal Tube
1 x High Efficiency Floor Brush
1 x Hard Floor Brush
1 x Power Tool Adaptor
1 x Crevice Tool /Brush
1 x Manual
1 x Guarantee Card

## DESCRIPTION OF PARTS - (Fig 1.)

**A.** Switch ON-OFF
**B.** Extraction velocity monitor
**C.** Shaker button
**D.** Carrying handle
**E.** Cartridge filter HEPA
**F.** Collection bag
**G.** Container
**H.** Container hose inlet
**I.** Container deflector flange
**J.** Blower outlet
**K.** Lid
**L.** Container catch
**M.** Castors
**N.** Main wheels
**O.** Hose bayonet fitting
**P.** Hose 3m x 39mmØ
**Q.** Extension tubes
**R.** Curved metal tube
**S.** Crevice/brush tool
**T.** Power tool adaptor
**U.** Hard Floor Brush
**V.** Hose spout
**W.** High efficiency floor brush
**X.** Onboard storage locations

- Check for damage to the tool, parts or accessories, which may have occurred during transport. Parts and accessories may be inside container.
- Take the time to thoroughly read and understand this manual prior to operation

**⚠ WARNING:**
**Never modify the appliance or any part of it. Damage or personal injury could result.**

## ASSEMBLY - (Fig 2.) ⚠

Accessories are secured inside the container. Undo the three container catches, remove the motor lid, remove accessories. Turn the container upside down, insert front castor wheels. Locate main wheels, and click to lock into place. Turn container right way up. Fit collection bag (see Inserting and Removing the Collection Bag section). Ensure the cartridge filter butterfly screw is tight. Refit motor and ensure all three container catches are fastened.

## Inserting Collection Bag - (Fig 3.) ⚠

- Unlock the container catches and remove the lid.
- The collection bag has a card-reinforced opening with a tab at the top.
- Ensure that the collection bag is handled with care to prevent damage and that is does not get caught or ripped by the container deflector flange or other sharp objects or projections.
- Insert the collection bag into the container with the opening towards the front of the vacuum cleaner.
- Pull the collection bag opening over the container deflector flange ensuring the collection bag opening passes over the ridge on the container deflector.
- Ensure collection bag is pushed tight.
- Fold out the rest of the disposal collection bag downwards into the container.

**⚠ CAUTION:**
**Take care of the bag to ensure it does not get damaged when fitting or when removing.**

## Removing the Collection Bag - (Fig.4) ⚠

To remove bag undo the container hose pull bag off the container deflector flange. Close the bag by flipping the tab over.

Dispose of the filter in a suitable container according to the applicable laws.

It is good practice however, to change the bag regularly to guarantee optimal cooling of the motor.

If the vacuum cleaner is used without the paper dust bag, it is recommended that the dust container be emptied and cleaned after each use.

**⚠ The collection bag must be replaced when the extraction velocity monitor goes to red and stays on red.**

## Mounting the Hose, Nozzles and Tubes - (Fig.5,5a) ⚠

- Connect the hose to the container by pushing the hose with bayonet fitting into the container hose inlet ensure bayonet tabs are vertical and turn clockwise to lock. To remove hose, turn hose with bayonet fitting anti-clockwise to remove from the inlet.
- The spouts are a push fit on the extension tubes. To remove the spouts, turn the parts in the opposite direction and pull apart.
- For carpets use the universal spout.
- For floors, clip the brush spout insert into the universal spout.

## Fitting/Removing Cartridge Filter - (Fig.6) ⚠

- The filter cartridge has to be completely pushed in and is secured by turning the butterfly nut clockwise. Check that it fits correctly.

In order to remove the cartridge filter turn the butterfly nut anti-clockwise and withdraw the cartridge filter. Ensure the seal around the retaining screw is in place.

**⚠ Before using the appliance always check that all the filters provided are in the correct position.**

## OPERATION



### Starting Operation ⚠

Observe correct mains voltage! The voltage of the power source must agree with the voltage specified on the nameplate of the vacuum cleaner. Equipment marked with 230V can also be operated with 220V. Please refer to the HSE guidelines concerning the handling of materials that are hazardous to one's health.

- The machine must be always kept on horizontal bases, in a safe and stable way.
- Insert the suitable filters for the proper use.
- Never use the appliance without the filters.
- Use the most suitable accessories for the requested usage.

The vacuum cleaner may generally not be used in rooms where the danger of an explosion exists. To save energy, only switch the vacuum cleaner on when using it.

### Dry Vacuuming ⚠

Never use the appliance without the polyurethane foam filter, cartridge filter or the collection bag.

- Fit the cartridge and lock in position using the butterfly screw.
- To switch the vacuum cleaner on, press button down.

To switch the vacuum cleaner off, press button down to release. If extraction velocity monitor is red, press and hold filter shaker button for 3 seconds. (device/ extraction must be on) filter will continue shaker function for a further 5 seconds after release. If the monitor turns red only as and when you connect to a power tool, ensure that the extraction spouts of the tool and hose are not blocked. If clear, it is OK to use. Check the flow periodically by removing the extraction hose.

If red monitor continues the dust bag may be full, and will need to be replaced. See Filter

**NOTE:** An adequate ventilation rate (M) must be provided for when the outgoing air is circulated. Observe the respective national regulations.

## Blower Function - (Fig 7.) ⚠

⚠ **CAUTION:**

**Function not usable if the appliance is used to dry vacuum harmful dust.**

Remove the hose from the inlet and then insert the hose with hose bayonet cap, into the blower outlet situated on top of inside the lid.

When job is over, switch off and isolate the plug from the socket.

After use, store vacuum cleaner carefully.

## MAINTENANCE AND SERVICE ⚠

Please use only Trend original spare parts accessories.

- Before any work on the vacuum cleaner itself, isolate from the power supply.
- For safe use and to ensure the appliance works properly, always keep the vacuum cleaner and ventilation slots clean.
- Wear a dust protection mask when maintaining and cleaning the vacuum cleaner.
- If the replacement of the power cable is necessary, this has to be done by Trend or a Trend Service Agent in order to avoid a safety hazard.
- A dust-technical inspection is to be carried out at least once every year by the manufacturer or an instructed person, e.g. for damage of the filter, tightness against leakage of the vacuum cleaner and function of the control unit.
- For category M vacuum cleaners that were in contaminated environments, the exterior as well as all machine parts should be cleaned or treated with sealants.
- When performing maintenance and repair work, all contaminated components that cannot be cleaned satisfactory must be disposed of.
- Such components must be disposed of in impermeable plastic bags conforming to the valid national regulations for the disposal of such waste.
- For user servicing, the machine shall be dismantled, cleaned and service, as far as is reasonably practicable, without causing risk to the maintenance staff and others. Suitable precautions include decontamination before dismantling, provision for local filtered exhaust ventilation where the machine is dismantled, cleaning of the maintenance area and suitable personal protect.
- The method by which covers of non-dust proof compartments should be removed for cleaning.
- The outside of the machine is decontaminated by vacuum cleaning methods and wiped clean or treated with sealant before being taken out of a hazardous area. All the machine part shall be regarded as contaminated when removed from the hazardous area and appropriate action taken to prevent dust dispersal
- Operators should observe any safety regulation appropriate to be the material being handled

For maintenance on behalf of the user, the vacuum cleaner must be disassembled, cleaned and maintained as far as feasible, without causing a risk for the maintenance personnel or other persons. Prior to disassembly, the vacuum cleaner should be cleaned in order to prevent any risks. The room/enclosure in which the vacuum cleaner is disassembled should be well ventilated. Wear personal protective equipment during maintenance. After maintenance of the appliance, the maintenance area should be cleaned.

## Cleaning ⚠

⚠ **WARNING:**

**Never use solvents or other harsh chemicals for cleaning the non-metallic parts of the appliance. These chemicals may weaken the materials used in these parts. Never let any liquid get inside the machine; never immerse any part of the appliance into a liquid.**

- Vacuum the outside of the dust extractor. Clean the exterior part of the machine with a dry cloth.
- After use dispose of the cloth in an appropriate container.

## Cartridge Filter - (Fig 8.)

Cartridge filter should periodically be washed only externally under running water to avoid damage to the filter surface.

It is recommended however that this filter be replaced every six months, or in relation to the frequency of use and to the type of dirt.

⚠ **WARNING:**

**Once the filter has been cleaned, check whether it is suitable for further use. If it has been damaged or broken, replace it with an original filter.**

## Lubrication

- Your appliance requires no additional lubrication.

## Storage

- Empty the container. Clean the vacuum inside and outside, refer to the Cleaning section.
- Clean or replace filters, refer to the Filters section.
- To prevent back injuries, remove a full disposal collection bag, or drain vacuumed up fluid before transporting the vacuum cleaner.
- Wind the cable around the carrying handle and wrap suction hose around container.
- Carry the vacuum cleaner only by the carrying handle.
- Store appliance and accessories in a safe place.
- Place the unit and accessories in a dry room and secure it from unauthorized use. Store out of reach of children.

## ENVIRONMENTAL PROTECTION

Recycle raw materials instead of disposing as waste.

Accessories and packaging should be sorted for environmental-friendly recycling.



Separate collection. This product must not be disposed of with normal household waste.

## Household User

Local regulations may provide for separate collection of electrical products from the household, at municipal waste sites or by retailer when you purchase a new product. Please call Trend Customer Services for advice as to how to dispose of unwanted Trend electrical products in an environmentally safe way or visit www.trend-uk.com

## Business Users

Please call Trend Customer Services for disposal of unwanted Trend electrical products.

## GUARANTEE

The unit carries a manufacturers guarantee in accordance with the conditions on the enclosed guarantee card.

For the location of your nearest Trend Service Agent, please call Trend Customer Services or see our stockist locator at www.trend-uk.com.

## ACCESSORIES

Please use only Trend original accessories.

All accessories are available for purchase from Trend Dealers. To find your nearest Trend Dealer please visit www.trend-uk.com

**Filter Bag**

| | |
|---|---|
| Ref. T32/1 | 1 off |
| Ref. T32/1/5 | 5 off |
| Ref. T32/1/10 | 10 off |

**Cartridge Filter HEPA**

| | |
|---|---|
| Ref. T32/2 | 1 off |