# ARAN TUB CHAIR WITH SEAT PAD



## Features

- Available in 6 shell colours.
- 4-leg Dark.
- Tub shell.
- Seat pad available as an option

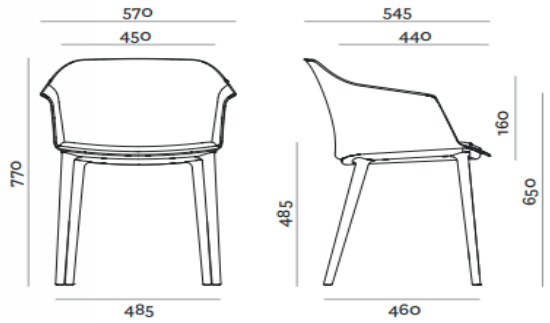


SHELL COLOURS

SNOWBALL

ROAD

POWDER

SWAMP

MOSS

CREAM

**Specialist Fabric Colour Options**

These are some of our more popular fabric finishes.

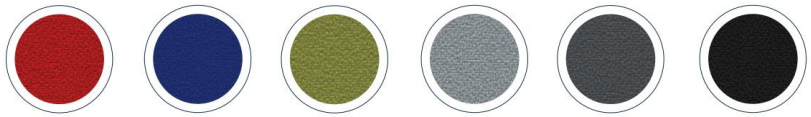

Fabric A DON/RD/FB | Fabric A DON/BL/FB | Fabric A DON/GR/FB | Fabric A DON/LG/FB | Fabric A DON/DG/FB | Fabric A DON/BK/FB